OCTOBER 17, 2003 (P= 26.15, Bo = 5.76, Lo = 86.30)

KITT PEAK MAGNETOGRAM--SOLIS

N

630.2 nm

Bright = +
Dark = -

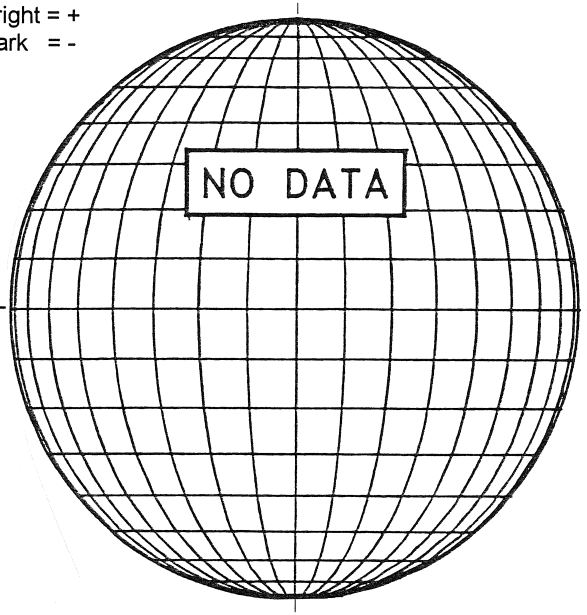

E--

STANFORD MAGNETOGRAM

N

Solid = +
Dashed = -

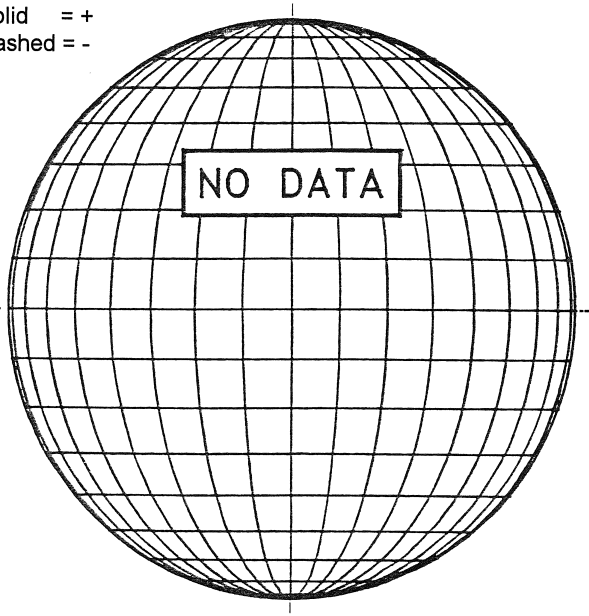

MT. WILSON MAGNETOGRAM

N

DeltaY = 13.1
DeltaX = 9.6

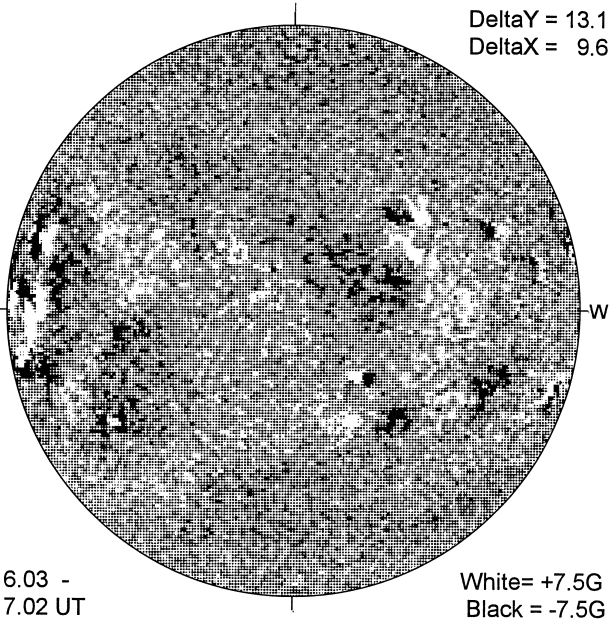

W

16.03 -
17.02 UT

White= +7.5G
Black = -7.5G

BIG BEAR H-ALPHA

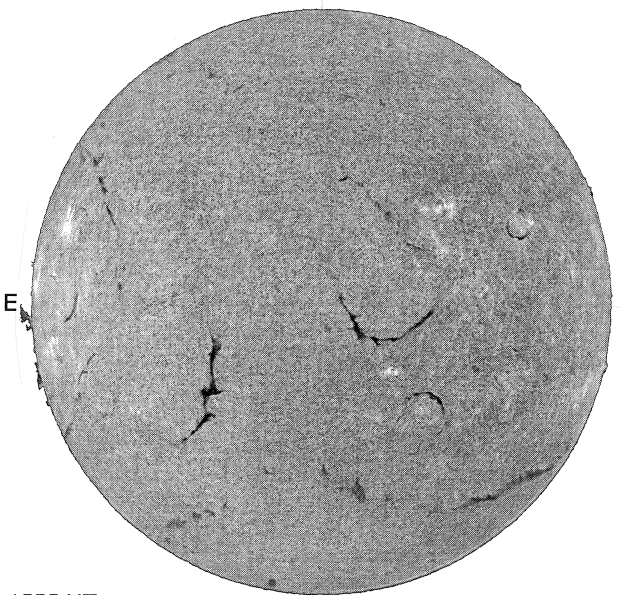

E

1555 UT

S

HOLLOMAN SUNSPOT

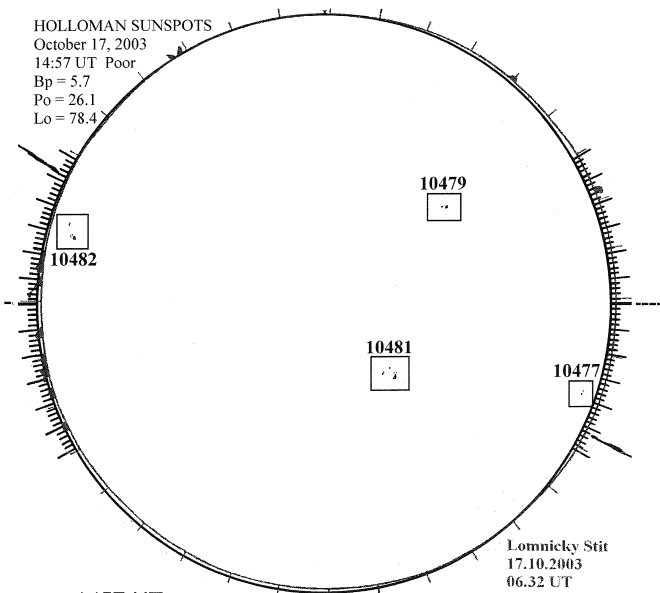

1457 UT
0632 UT LOMN Prom S

SACRAMENTO PEAK CORONA (1.15 Radii)----

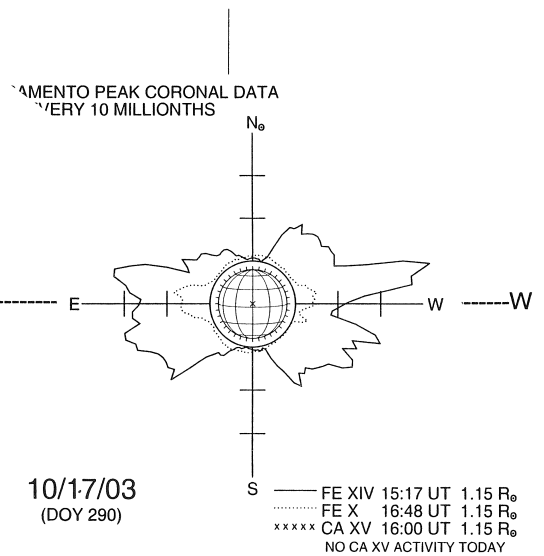

10/17/03
(DOY 290)

S