OCTOBER 14, 2003 (P= 26.25, Bo = 5.98, Lo = 125.88)

KITT PEAK MAGNETOGRAM--SOLIS

N **630.2 nm**

Bright = +
Dark = -

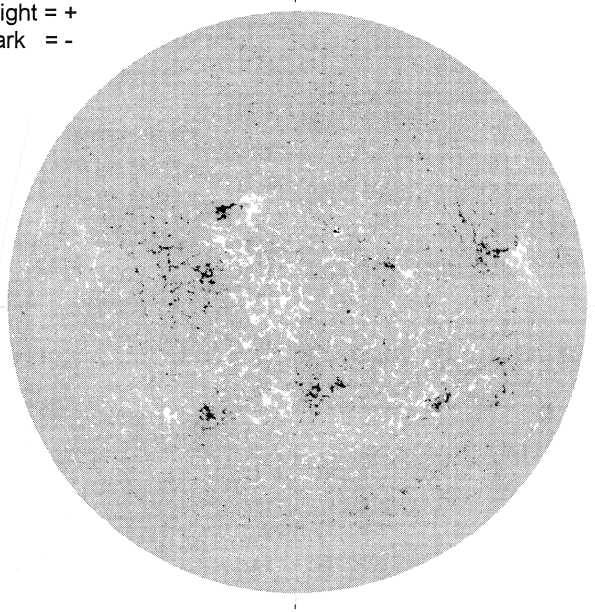

E-

1630 UT

STANFORD MAGNETOGRAM

N

Solid = +
Dashed = -

1921 UT

MT. WILSON MAGNETOGRAM

N

DeltaY = 13.1
DeltaX = 9.6

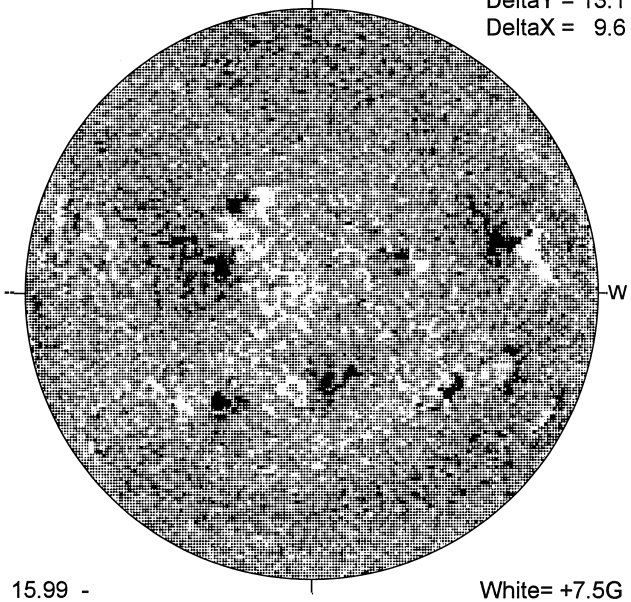

-W

15.99 -
16.94 UT

White= +7.5G
Black = -7.5G

CATANIA H-ALPHA

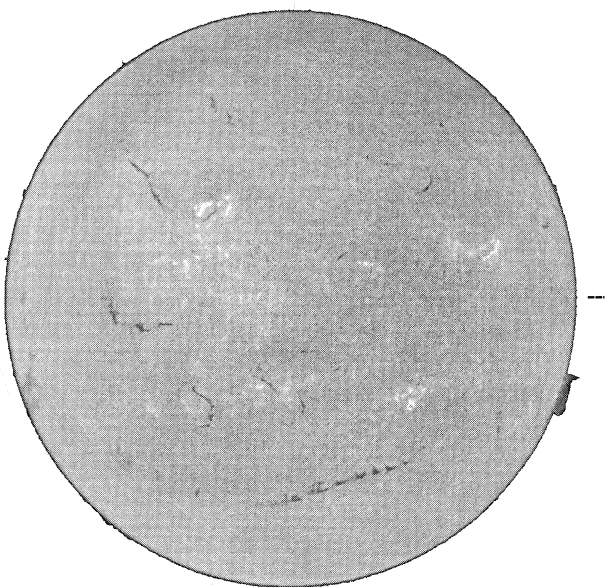

E

0931 UT

S

HOLLOMAN SUNSPOT

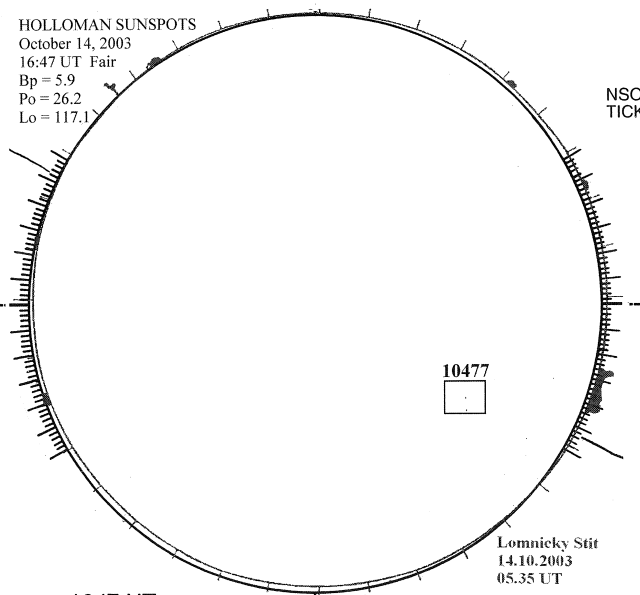

1647 UT
0535 UT LOMN Prom S

SACRAMENTO PEAK CORONA (1.15 Radii)----

NSO / SACRAMENTO PEAK CORONAL DATA
TICK MARKS EVERY 10 MILLIONTHS

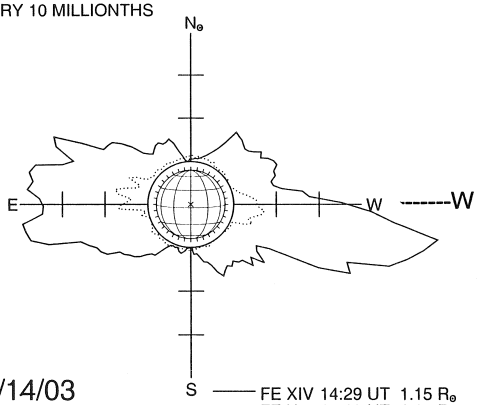

10/14/03
(DOY 287)

FE XIV 14:29 UT 1.15 R☉
FE X 17:10 UT 1.15 R☉
xxxxx CA XV 15:44 UT 1.15 R☉
NO CA XV ACTIVITY TODAY

S