OCTOBER 13, 2003 (P= 26.27, Bo = 6.05, Lo = 139.07)

KITT PEAK MAGNETOGRAM--SOLIS

N **630.2 nm**

Bright = +
Dark = -

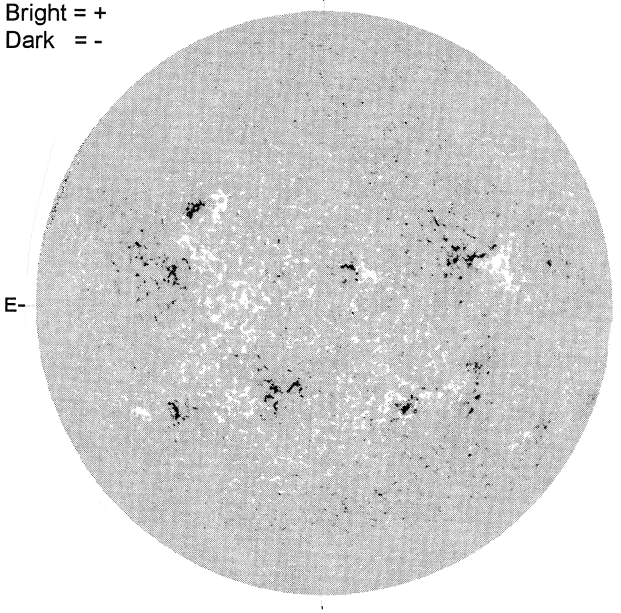

1538 UT

STANFORD MAGNETOGRAM

N

Solid = +
Dashed = -

1936 UT

MT. WILSON MAGNETOGRAM

N

DeltaY = 13.1
DeltaX = 9.6

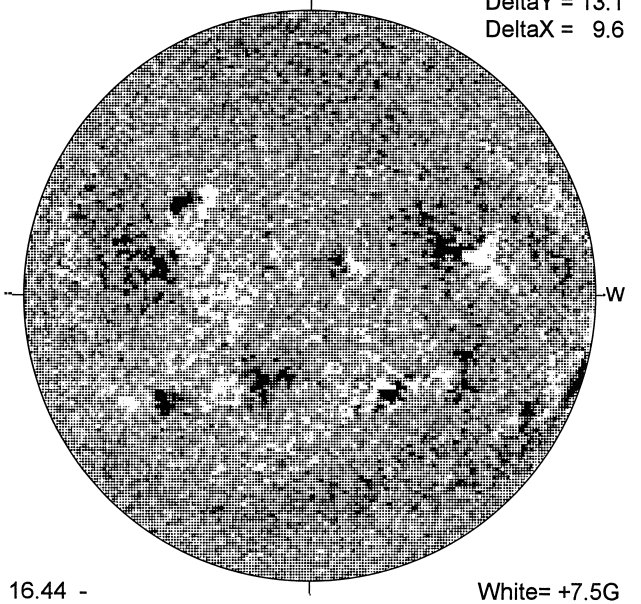

16.44 -
17.39 UT

White= +7.5G
Black = -7.5G

CATANIA H-ALPHA

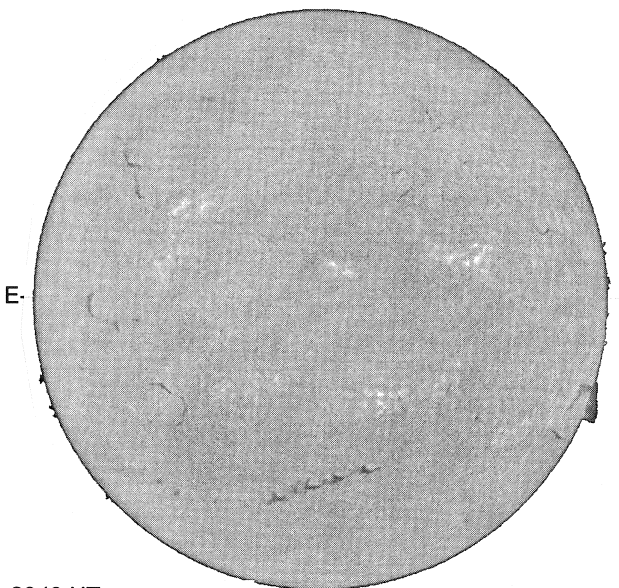

0949 UT

S

HOLLOMAN SUNSPOT

HOLLOMAN SUNSPOTS
October 13, 2003
15:50 UT Fair
Bp = 6.0
Po = 26.2
Lo = 130.7

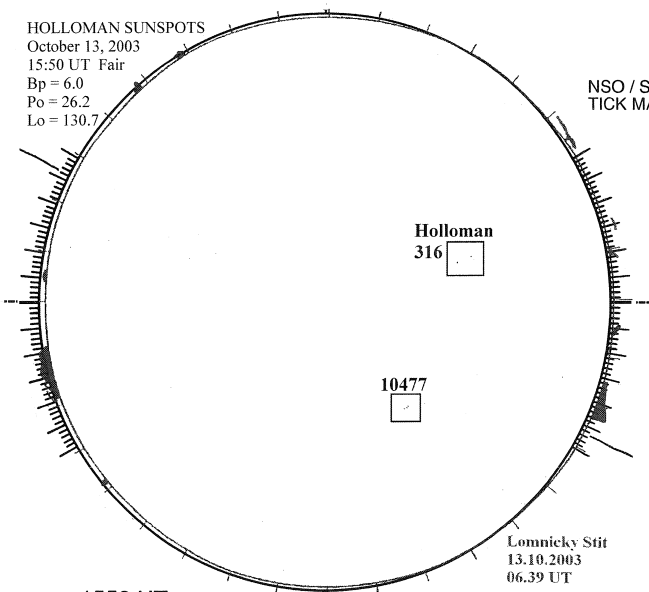

1550 UT
0639 UT LOMN Prom S

SACRAMENTO PEAK CORONA (1.15 Radii)----

NSO / SACRAMENTO PEAK CORONAL DATA
TICK MARKS EVERY 10 MILLIONTHS

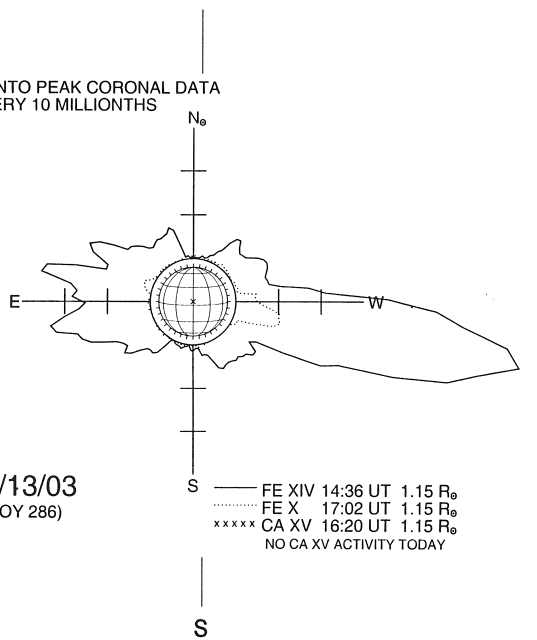

10/13/03
(DOY 286)

FE XIV 14:36 UT 1.15 R☉
FE X 17:02 UT 1.15 R☉
xxxxx CA XV 16:20 UT 1.15 R☉
NO CA XV ACTIVITY TODAY

S