OCTOBER 9, 2003 (P= 26.28, Bo = 6.31, Lo = 191.84)

KITT PEAK MAGNETOGRAM--SOLIS

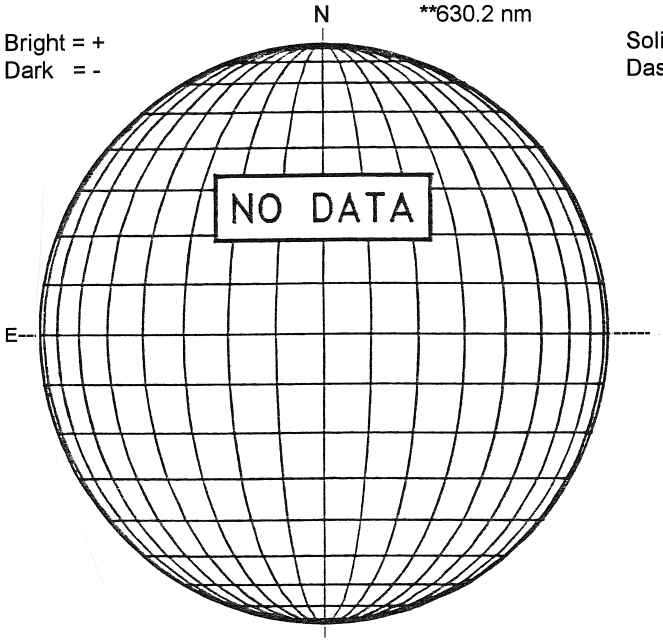

STANFORD MAGNETOGRAM

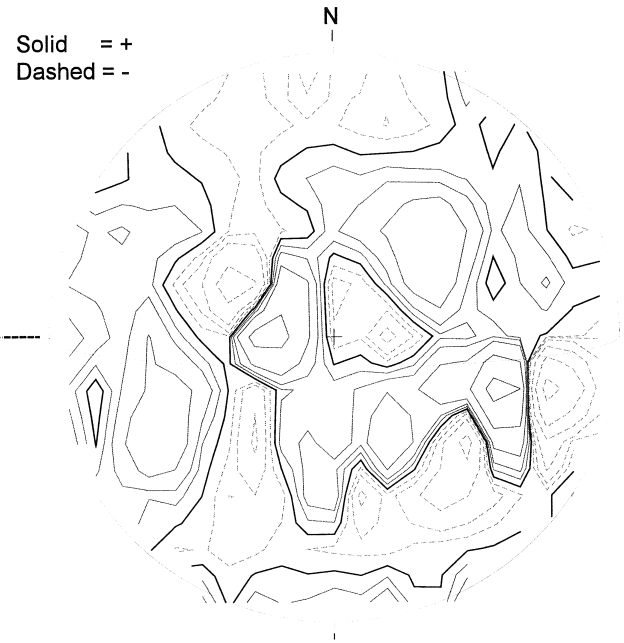

1941 UT

MT. WILSON MAGNETOGRAM

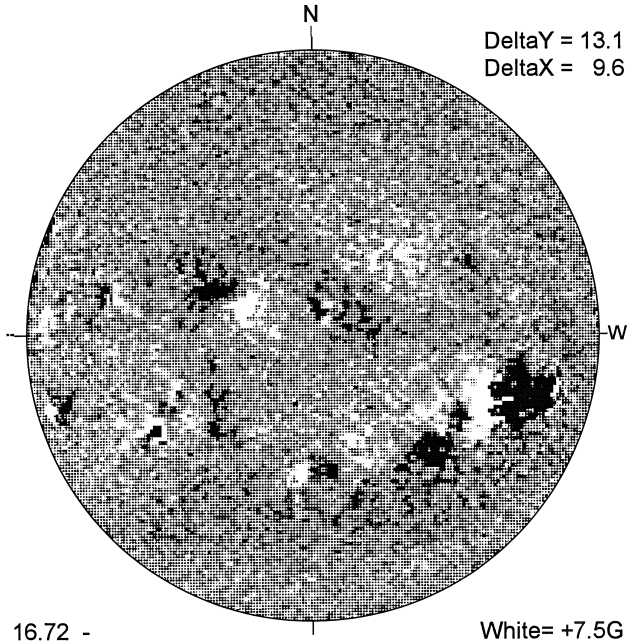

16.72 -
17.66 UT

BIG BEAR H-ALPHA

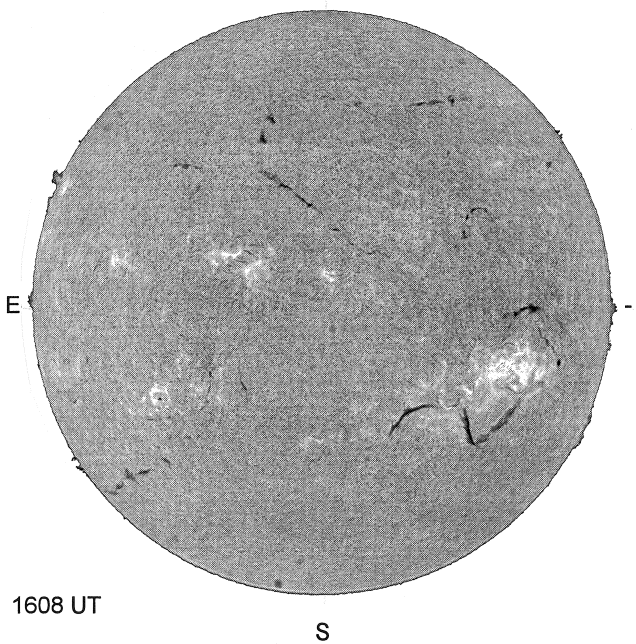

1608 UT

HOLLOMAN SUNSPOT

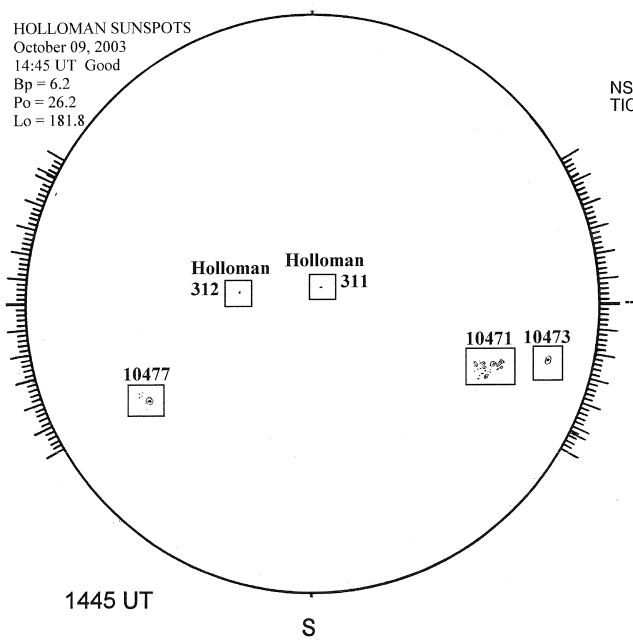

1445 UT

SACRAMENTO PEAK CORONA (1.15 Radii)

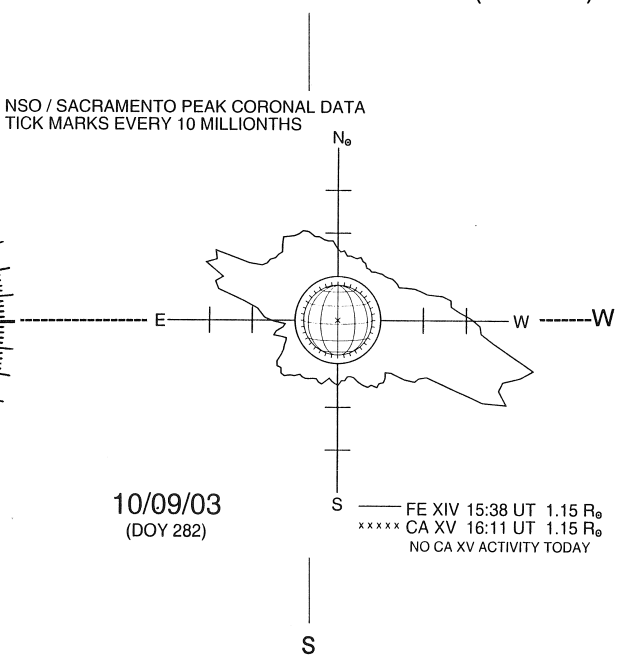

10/09/03
(DOY 282)