OCTOBER 1, 2003 (P= 25.95, Bo = 6.74, Lo = 297.40)

KITT PEAK MAGNETOGRAM--SOLIS

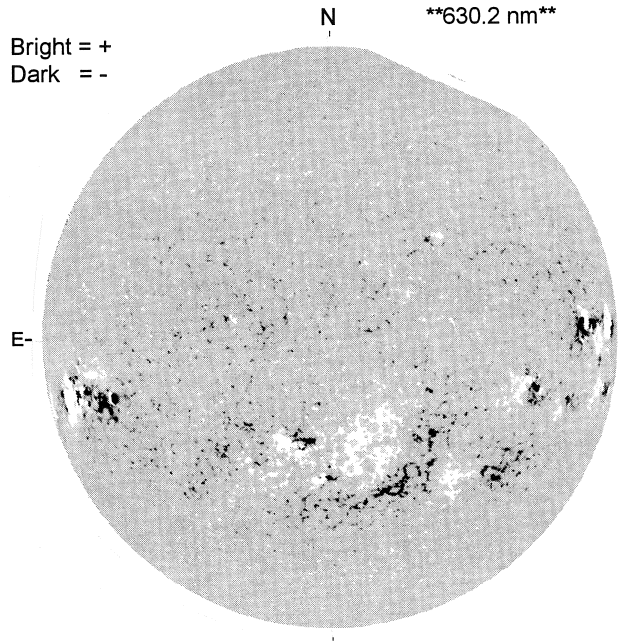

1536 UT

STANFORD MAGNETOGRAM

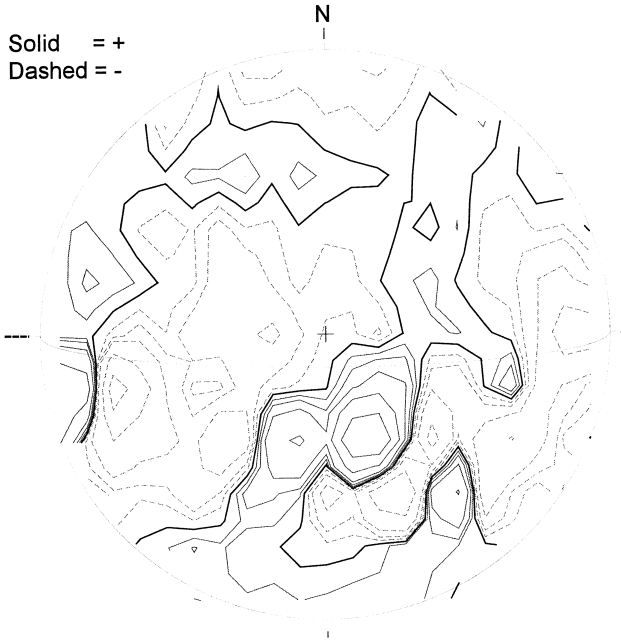

1915 UT

MT. WILSON MAGNETOGRAM

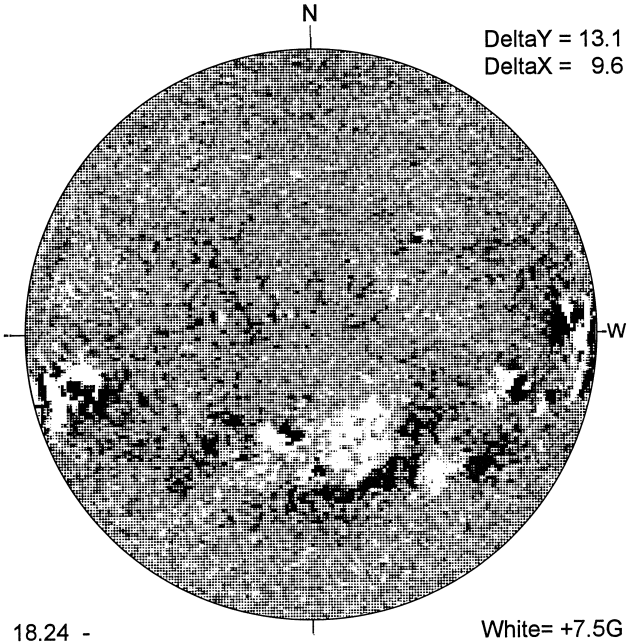

18.24 -
19.19 UT

White= +7.5G
Black = -7.5G

BIG BEAR H-ALPHA

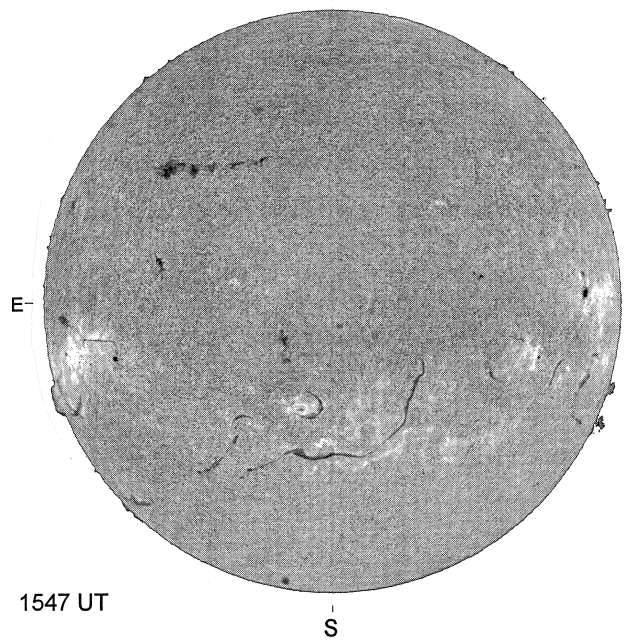

1547 UT

HOLLOMAN SUNSPOT

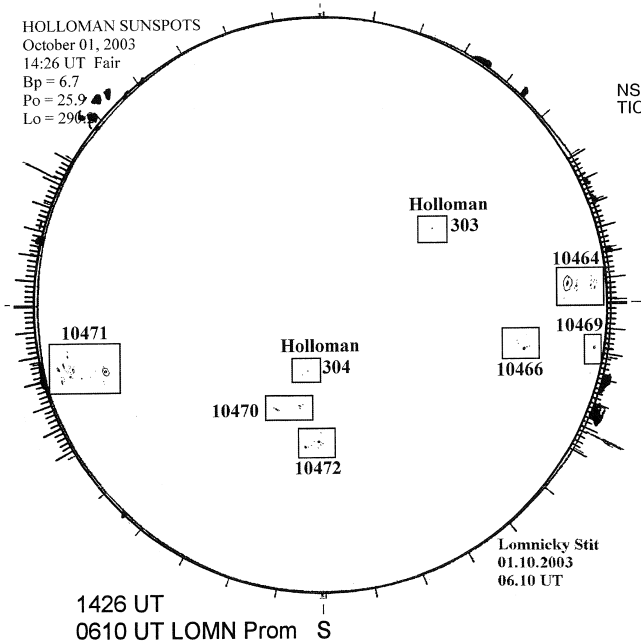

1426 UT
0610 UT LOMN Prom

SACRAMENTO PEAK CORONA (1.15 Radii)----

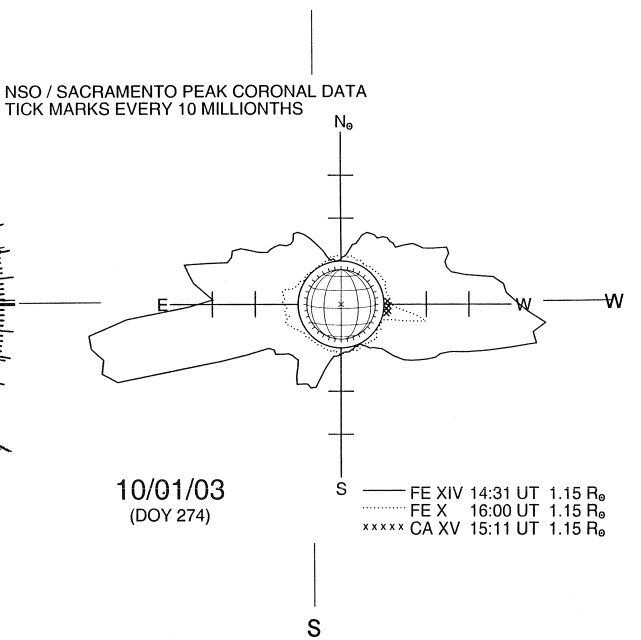

10/01/03
(DOY 274)

S