SEPTEMBER 30, 2003 (P= 25.87, Bo = 6.79, Lo = 310.59)

KITT PEAK MAGNETOGRAM—SOLIS

630.2 nm

Bright = +
Dark = -

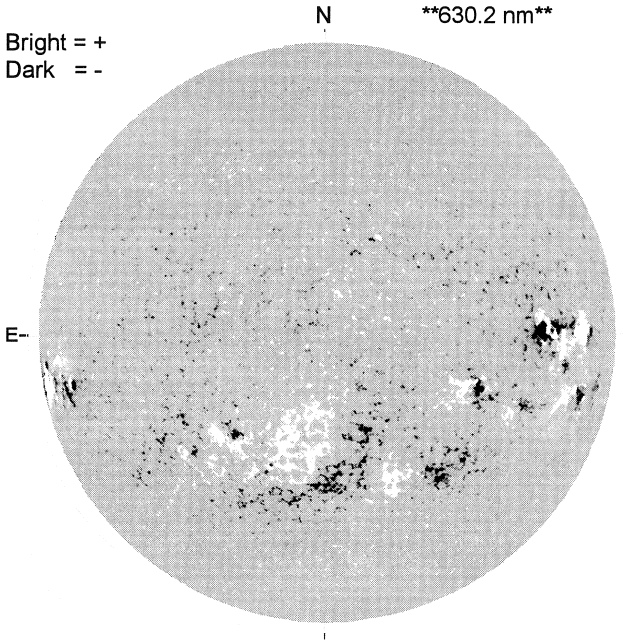

1542 UT

STANFORD MAGNETOGRAM

Solid = +
Dashed = -

2052 UT

MT. WILSON MAGNETOGRAM

DeltaY = 13.0
DeltaX = 9.6

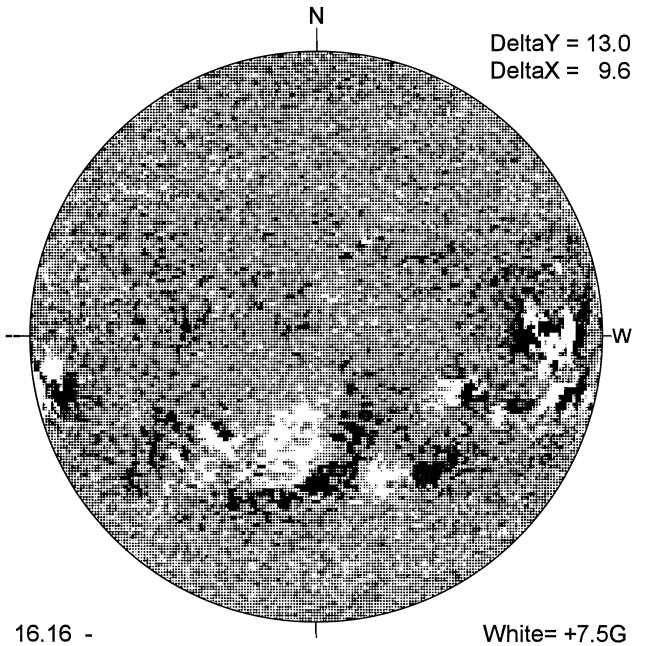

16.16 -
17.11 UT

White= +7.5G
Black = -7.5G

BIG BEAR H-ALPHA

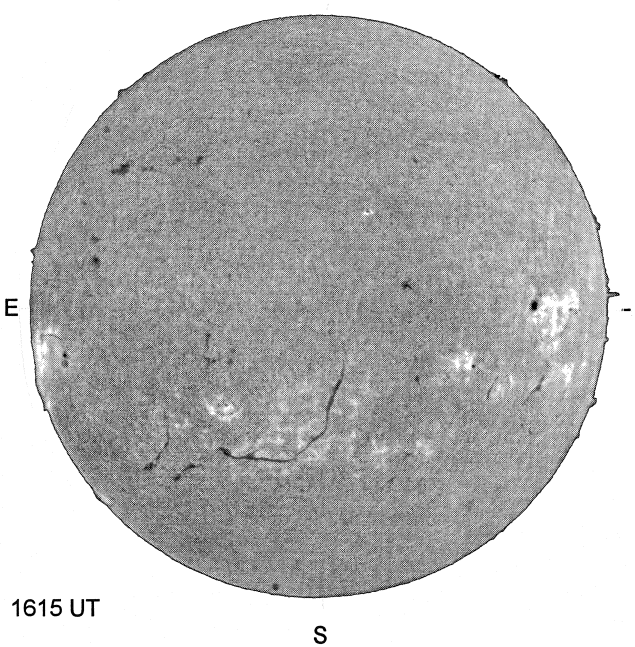

1615 UT

HOLLOMAN SUNSPOT

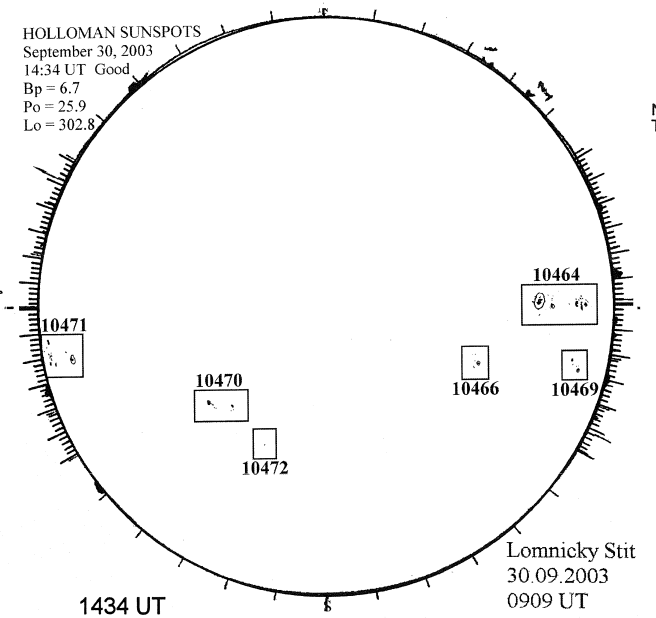

1434 UT
0909 UT LOMN Prom

SACRAMENTO PEAK CORONA (1.15 Radii)

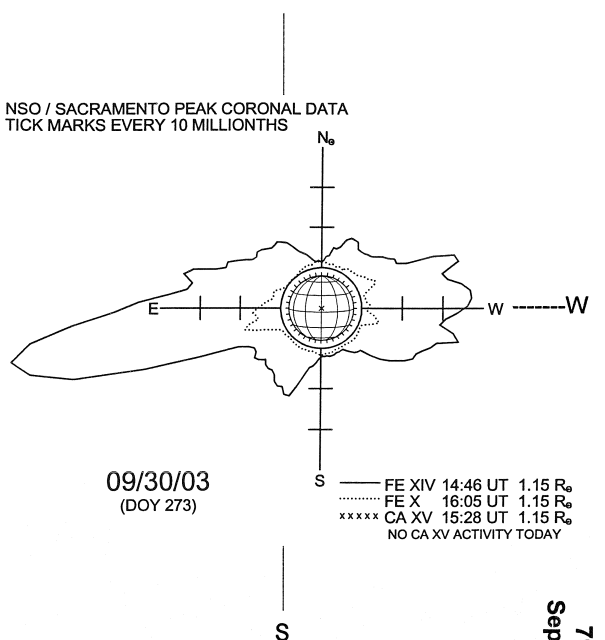

09/30/03
(DOY 273)