SEPTEMBER 24, 2003 (P= 25.29, Bo = 7.01, Lo = 29.77)

KITT PEAK MAGNETOGRAM

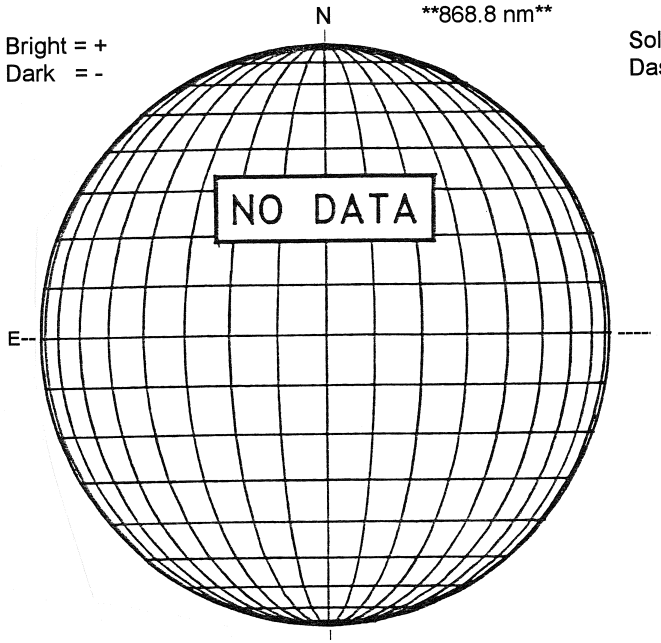

STANFORD MAGNETOGRAM

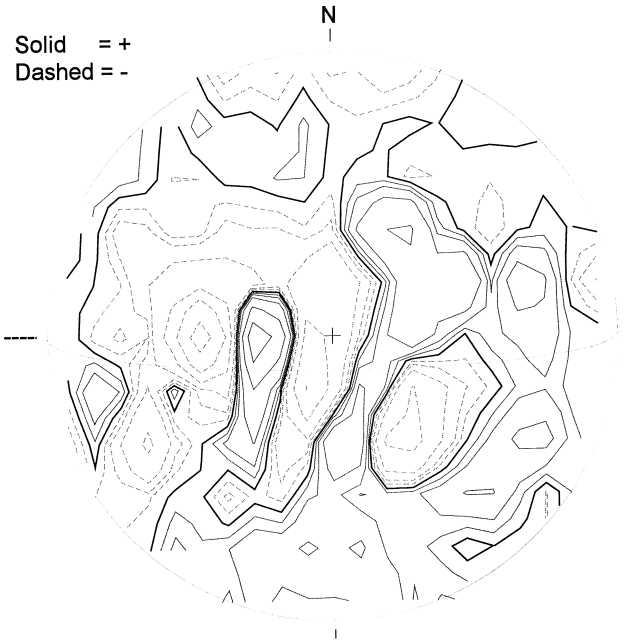

MT. WILSON MAGNETOGRAM

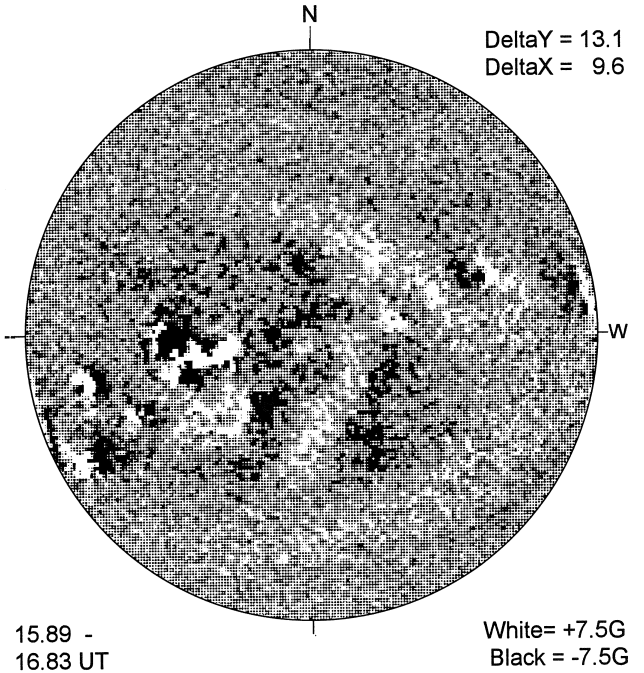

BIG BEAR H-ALPHA

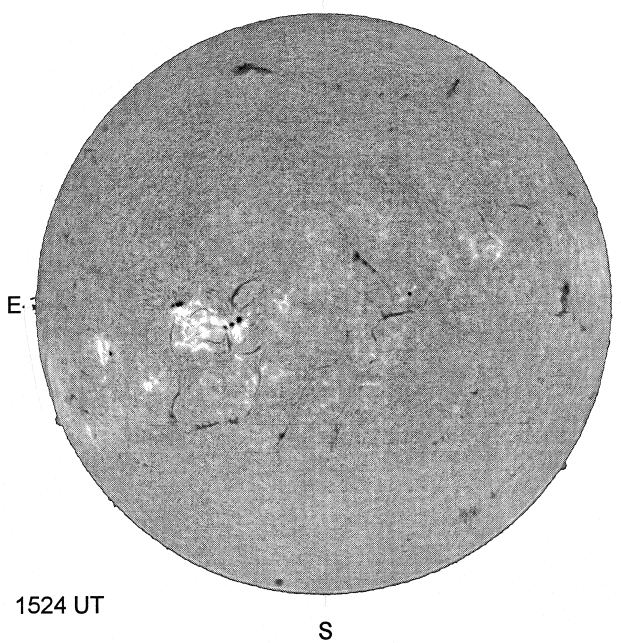

HOLLOMAN SUNSPOT

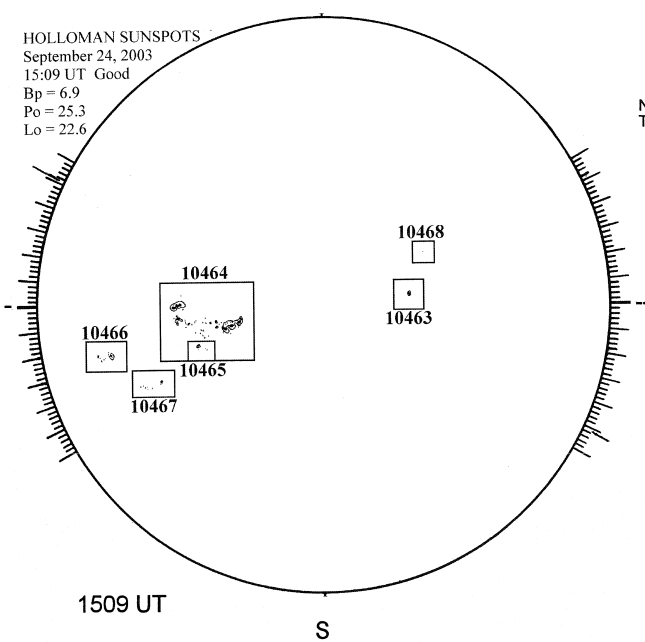

SACRAMENTO PEAK CORONA (1.15 Radii)----

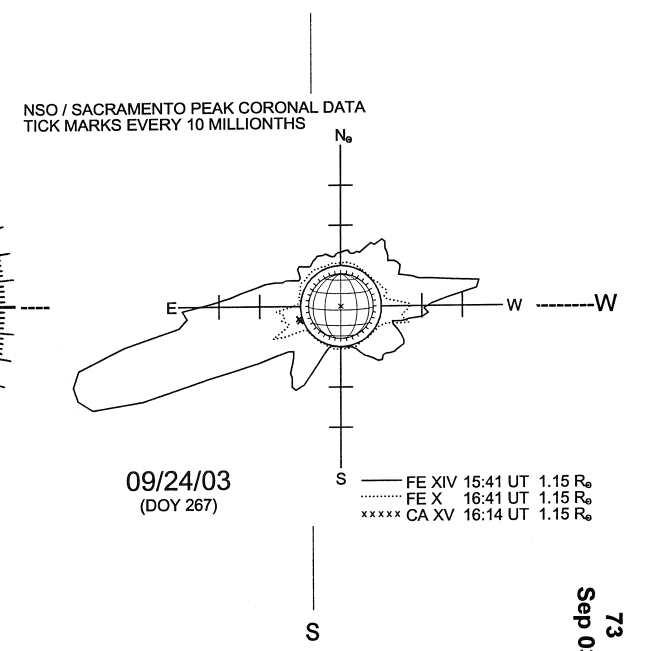

73
Sep 0