SEPTEMBER 18, 2003 (P= 24.47, Bo = 7.16, Lo = 108.97)

KITT PEAK MAGNETOGRAM

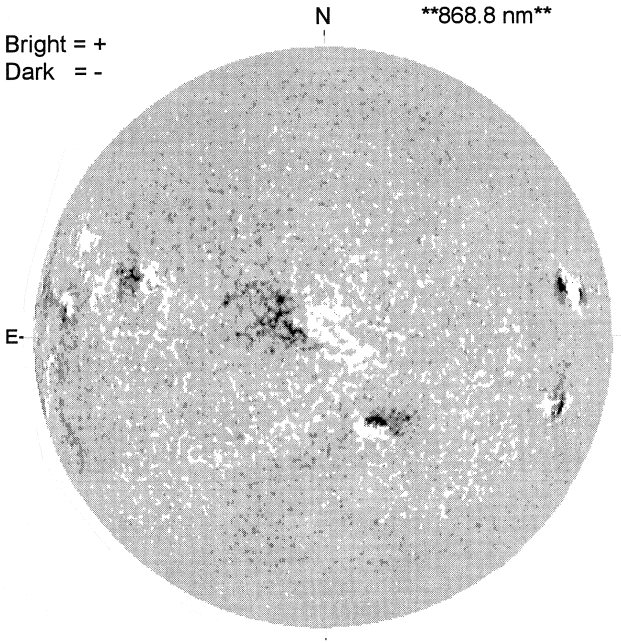

STANFORD MAGNETOGRAM

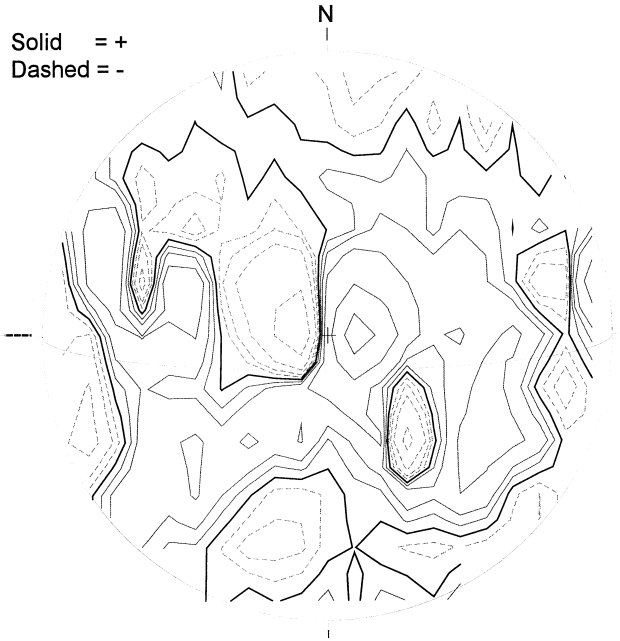

MT. WILSON MAGNETOGRAM

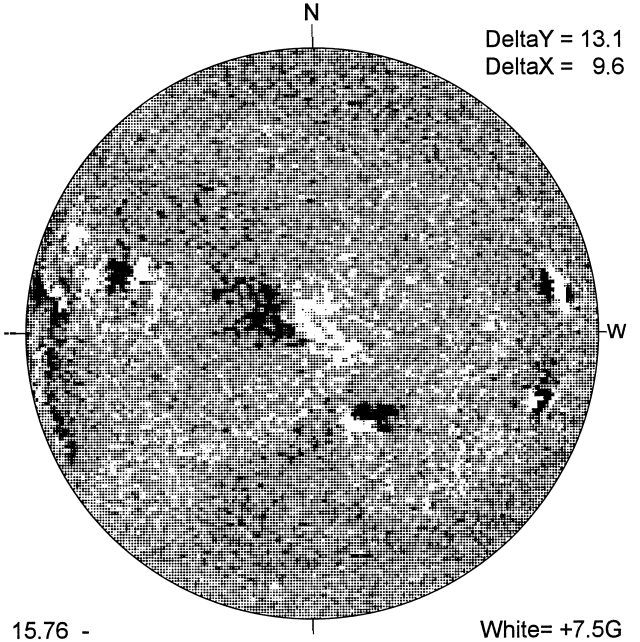

BIG BEAR H-ALPHA

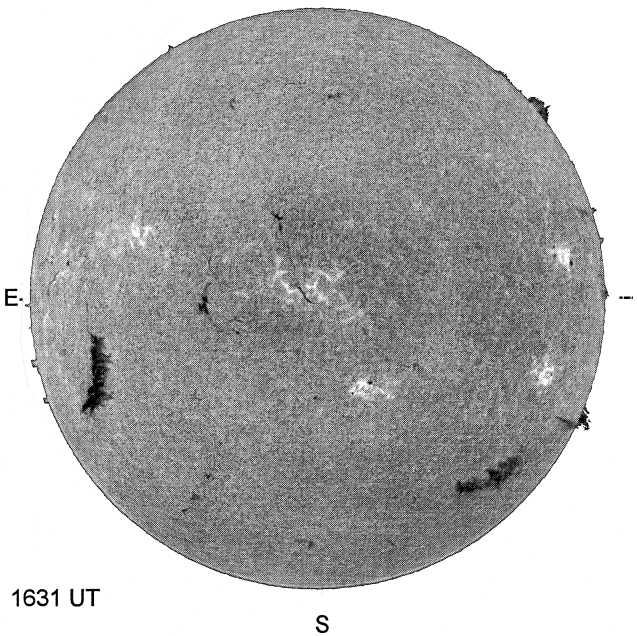

HOLLOMAN SUNSPOT

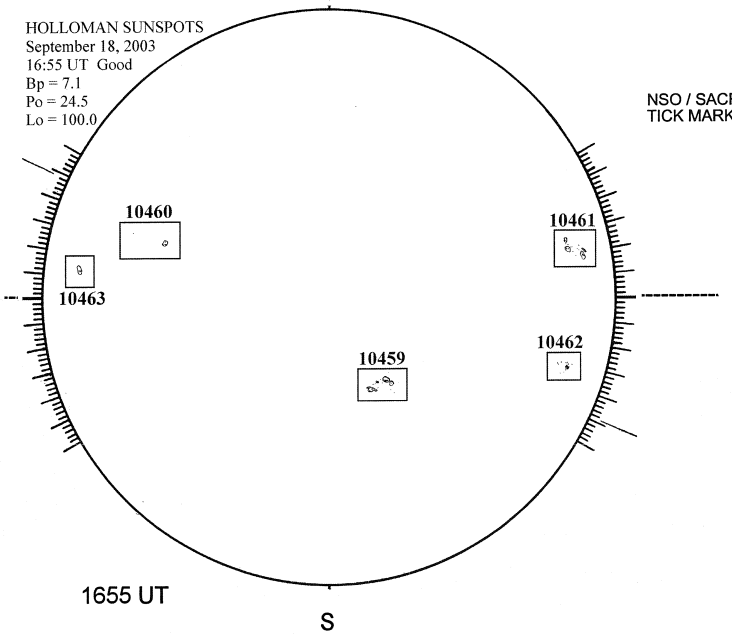
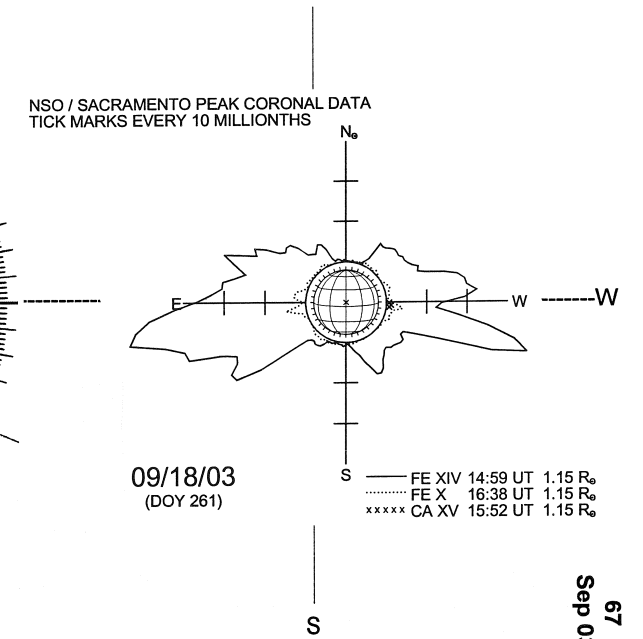
SACRAMENTO PEAK CORONA (1.15 Radii)----