SEPTEMBER 16, 2003 (P= 24.15, Bo = 7.20, Lo = 135.38)

KITT PEAK MAGNETOGRAM

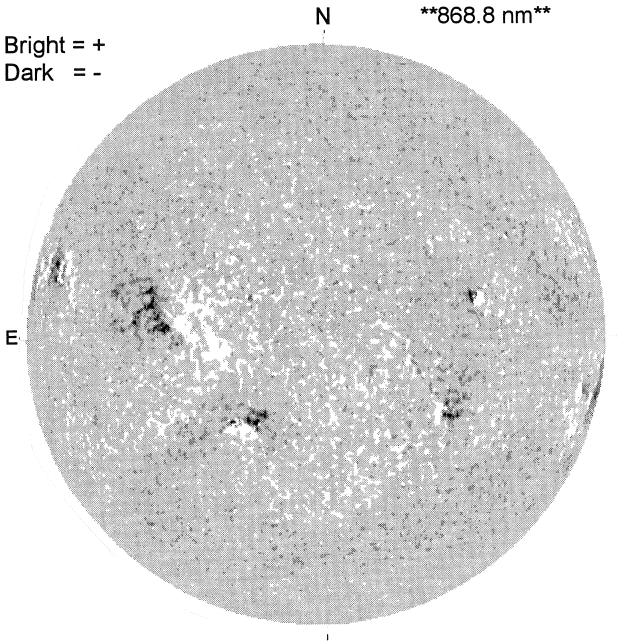

STANFORD MAGNETOGRAM

MT. WILSON MAGNETOGRAM

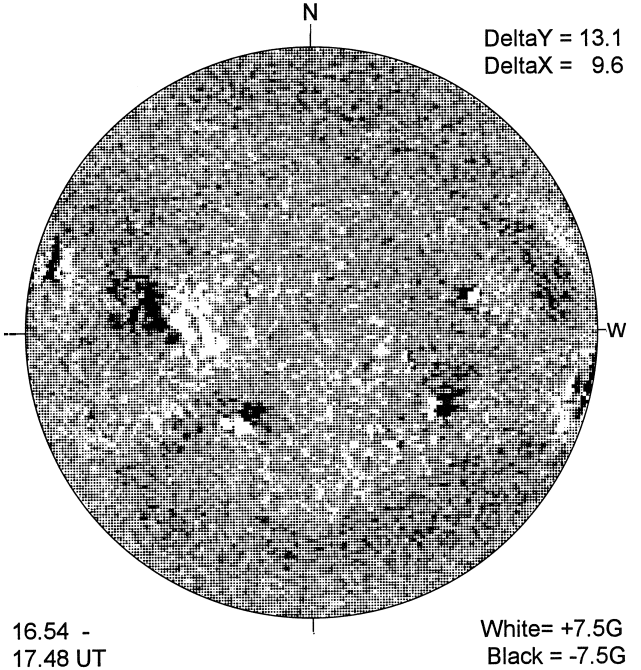

BIG BEAR H-ALPHA

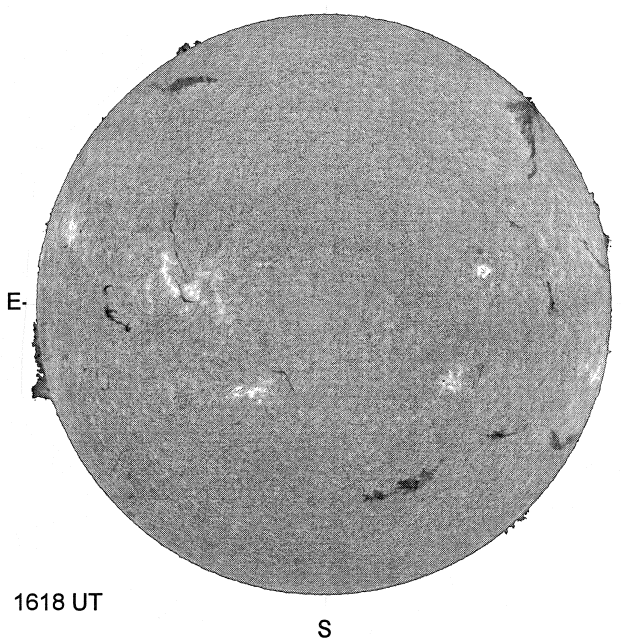

HOLLOMAN SUNSPOT

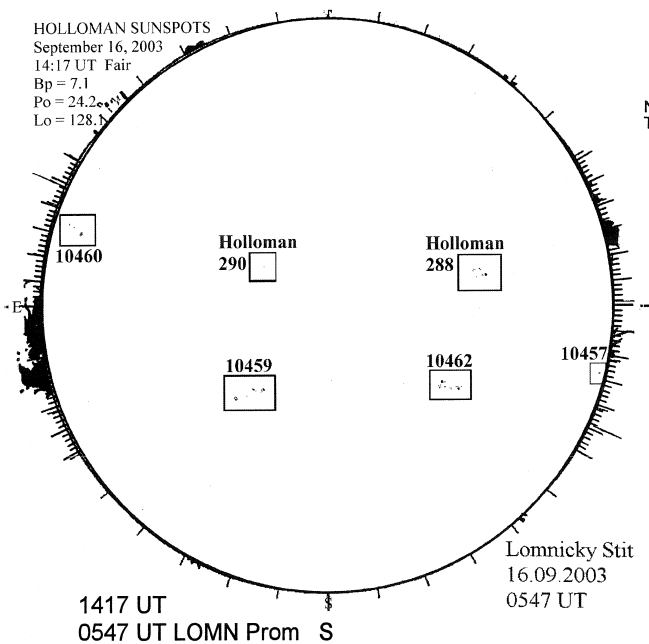

SACRAMENTO PEAK CORONA (1.15 Radii)

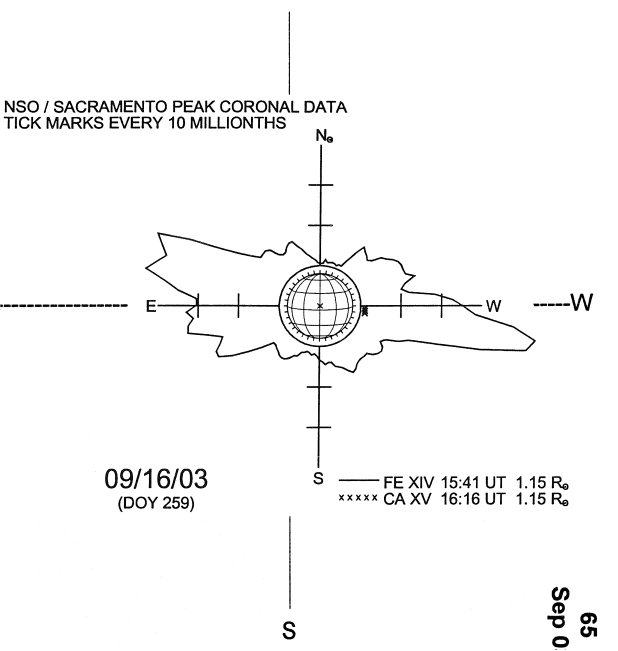

65
Sep 0