SEPTEMBER 12, 2003 (P= 23.43, Bo = 7.24, Lo = 188.19)

KITT PEAK MAGNETOGRAM

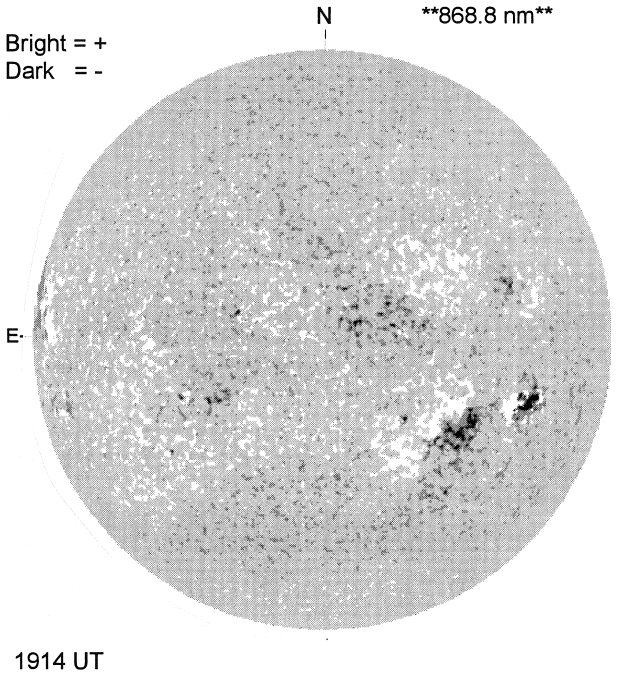

STANFORD MAGNETOGRAM

MT. WILSON MAGNETOGRAM

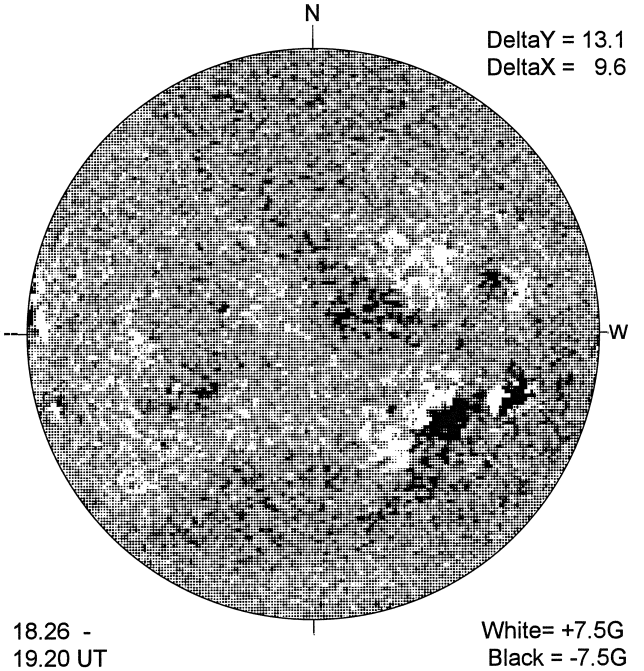

BIG BEAR H-ALPHA

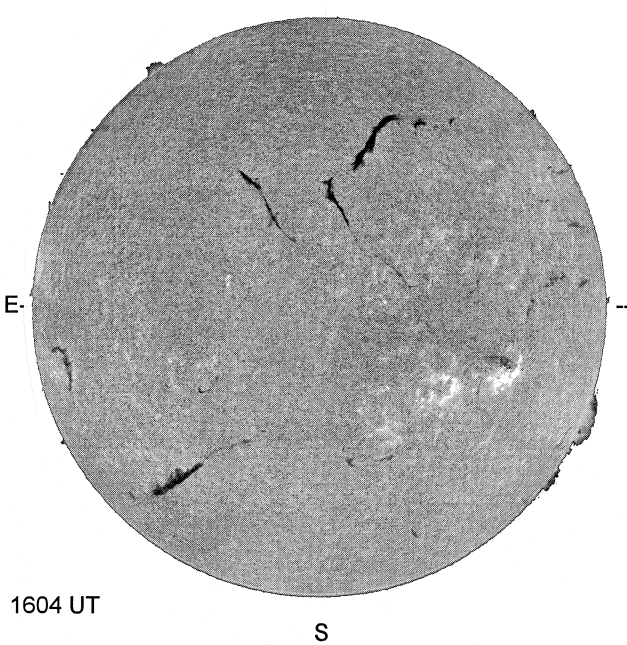

HOLLOMAN SUNSPOTS

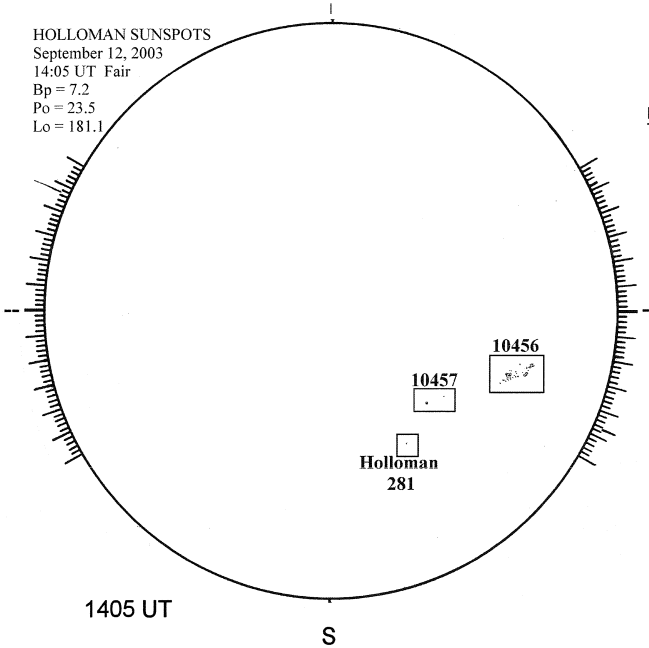

SACRAMENTO PEAK CORONA (1.15 Radii)----

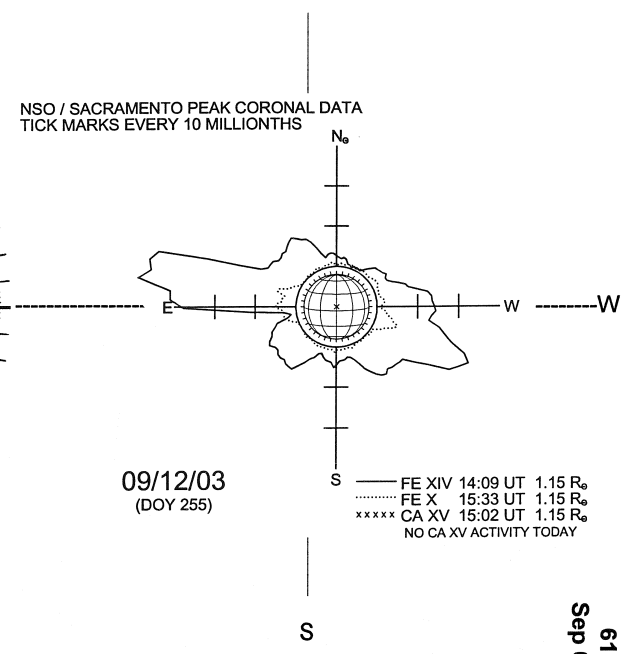

61
Sep