SEPTEMBER 5, 2003 (P= 21.93, Bo = 7.24, Lo = 280.63)

KITT PEAK MAGNETOGRAM

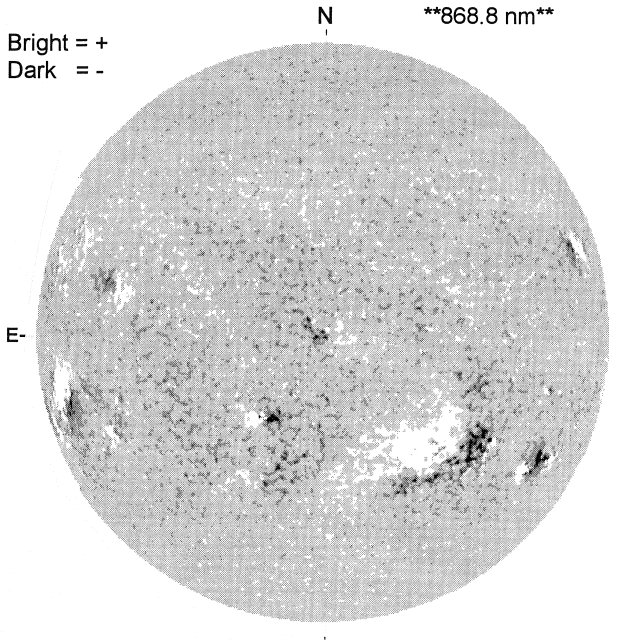

STANFORD MAGNETOGRAM

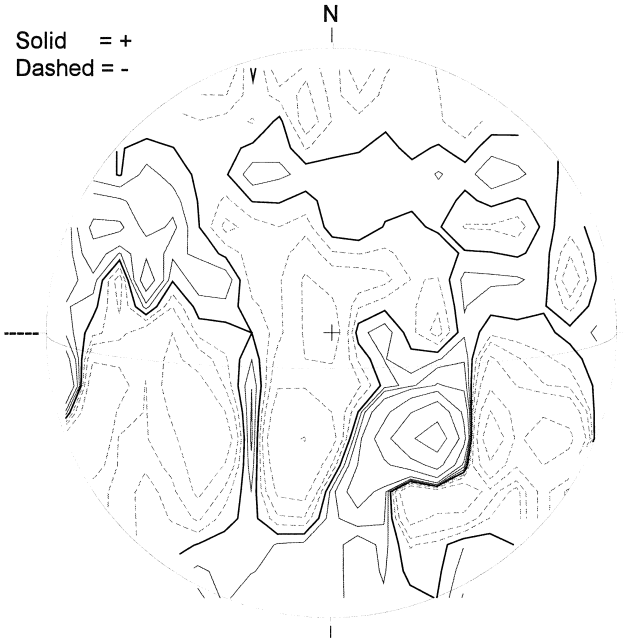

MT. WILSON MAGNETOGRAM

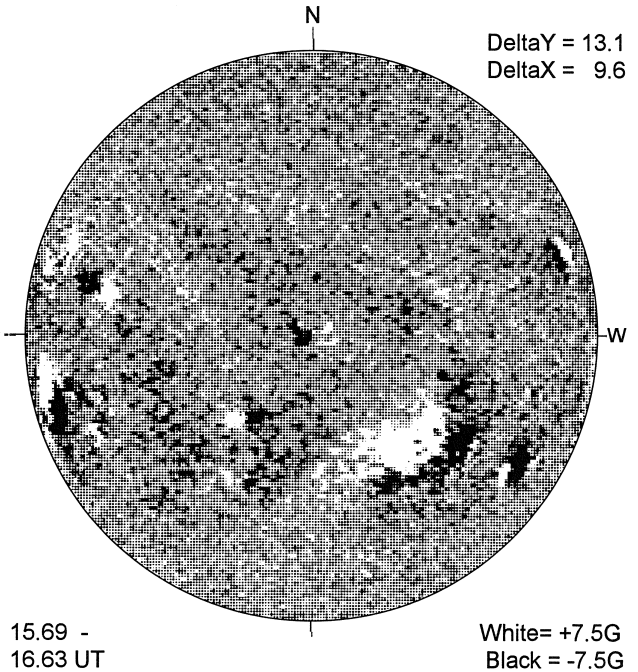

BIG BEAR H-ALPHA

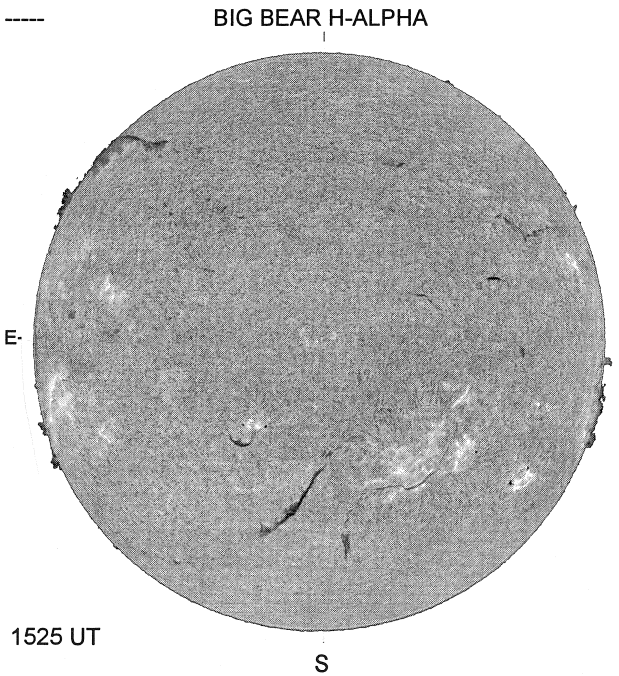

HOLLOMAN SUNSPOT

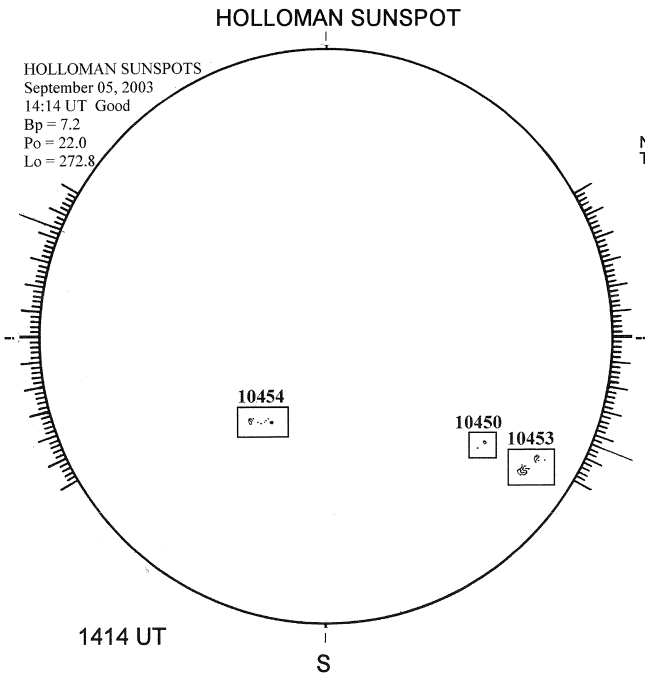
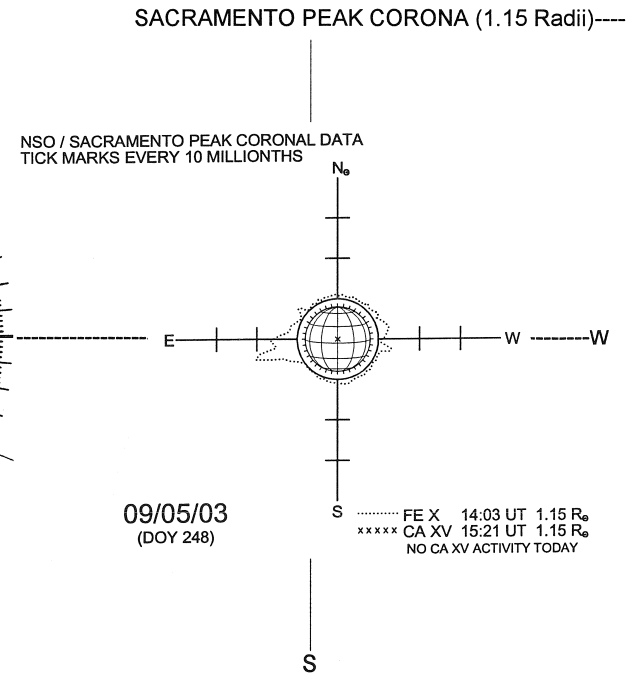
SACRAMENTO PEAK CORONA (1.15 Radii)