AUGUST 29, 2003 (P= 20.16, Bo = 7.13, Lo = 13.10)

KITT PEAK MAGNETOGRAM

Bright = +
Dark = -

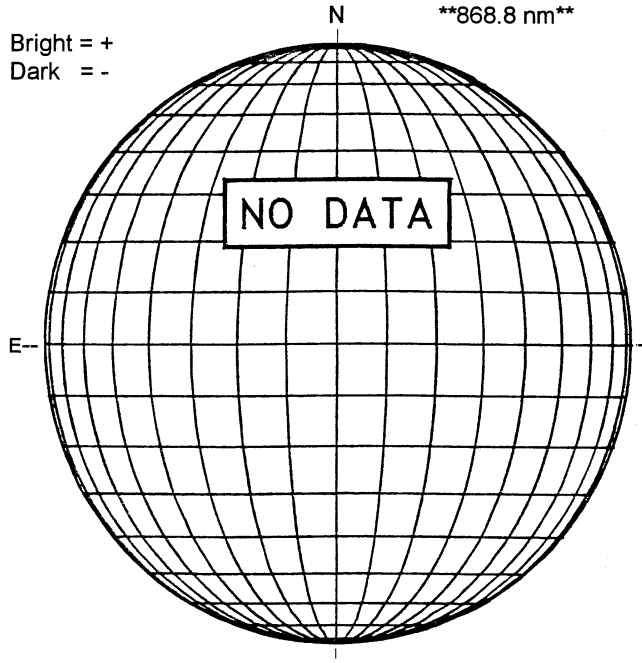

STANFORD MAGNETOGRAM

Solid = +
Dashed = -

2147 UT

MT. WILSON MAGNETOGRAM

DeltaY = 13.1
DeltaX = 9.6

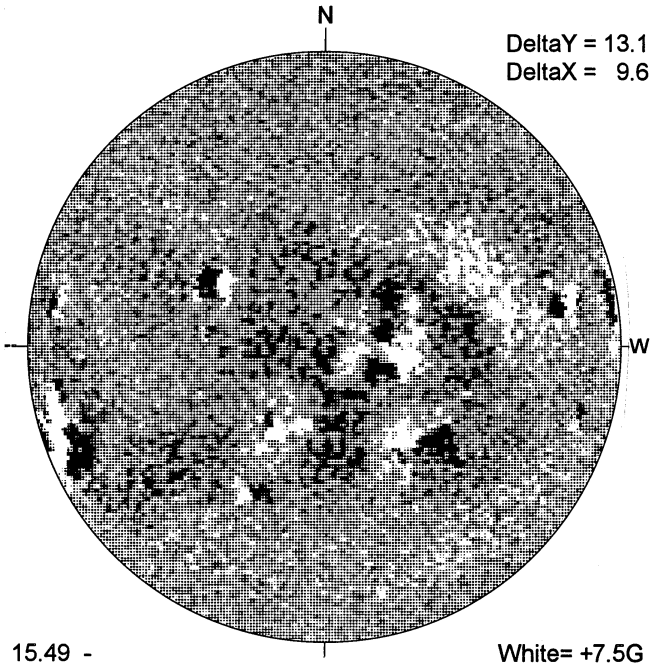

15.49 -
16.42 UT

White= +7.5G
Black = -7.5G

BIG BEAR H-ALPHA

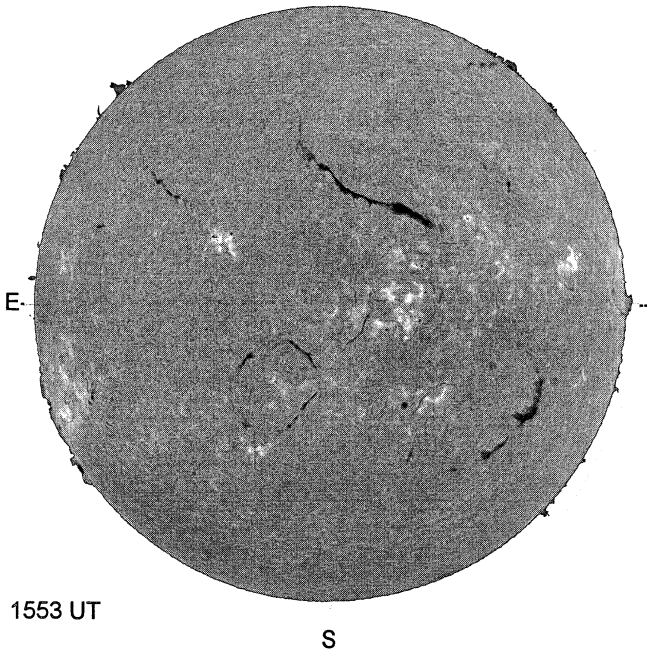

1553 UT

S

HOLLOMAN SUNSPOT

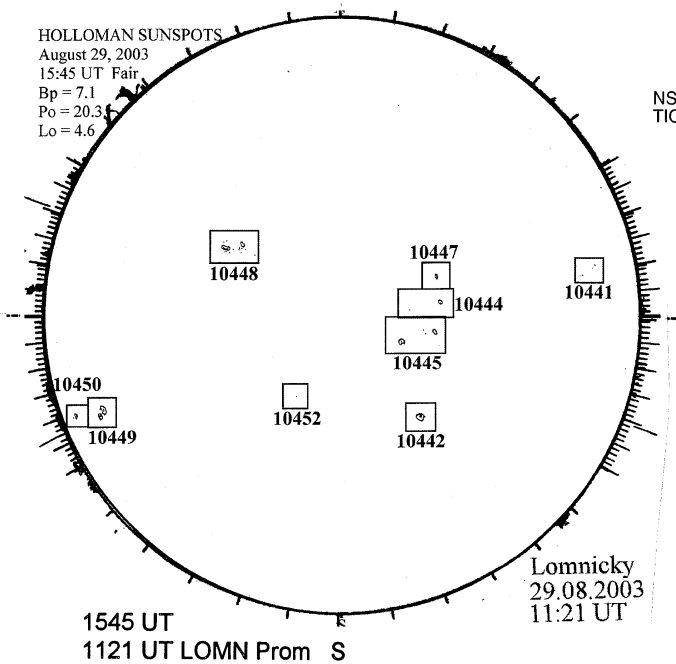

1545 UT
1121 UT LOMN Prom S

SACRAMENTO PEAK CORONA (1.15 Radii)----

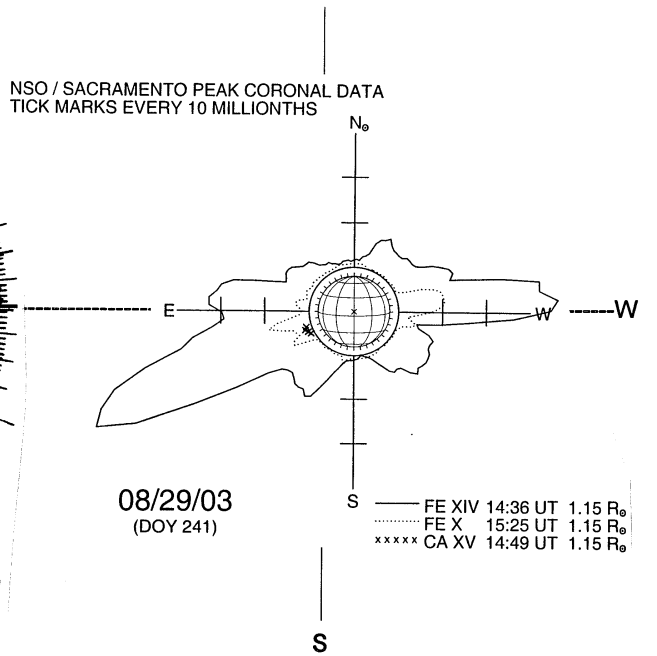

S