AUGUST 28, 2003 (P= 19.89, Bo = 7.11, Lo = 26.31)

KITT PEAK MAGNETOGRAM

Bright = +
Dark = -

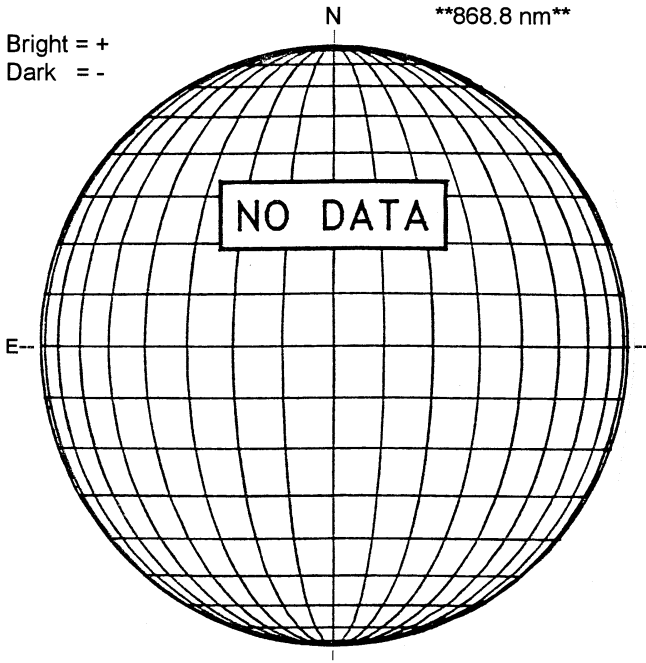

STANFORD MAGNETOGRAM

Solid = +
Dashed = -

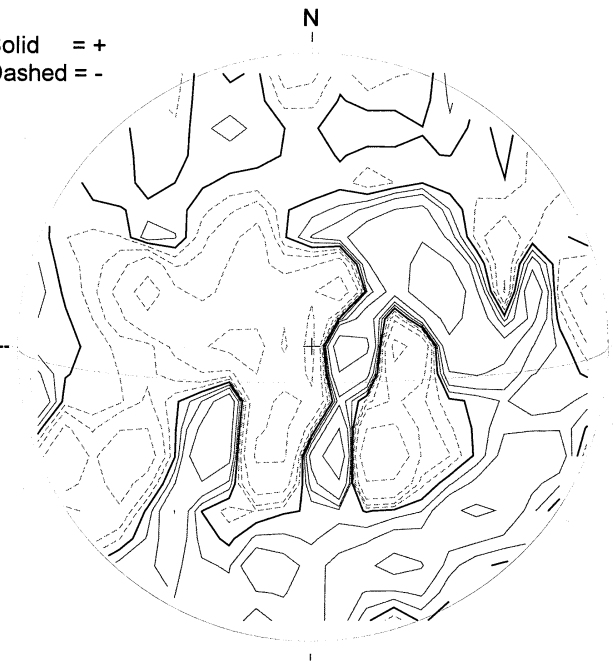

2136 UT

MT. WILSON MAGNETOGRAM

DeltaY = 13.1
DeltaX = 9.6

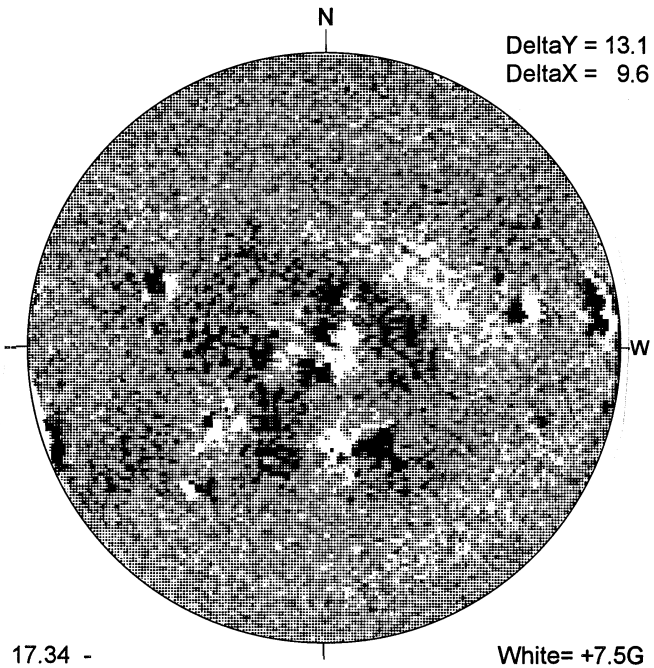

17.34 -
18.27 UT

White= +7.5G
Black = -7.5G

BIG BEAR H-ALPHA

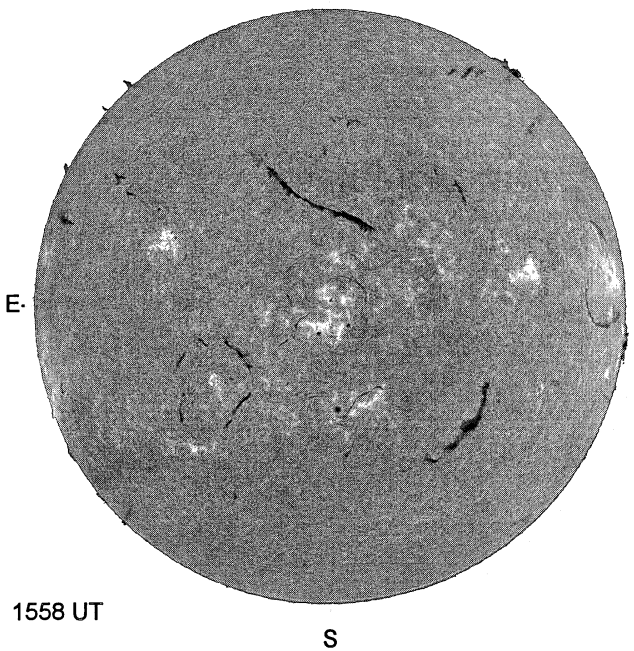

1558 UT

S

HOLLOMAN SUNSPOT

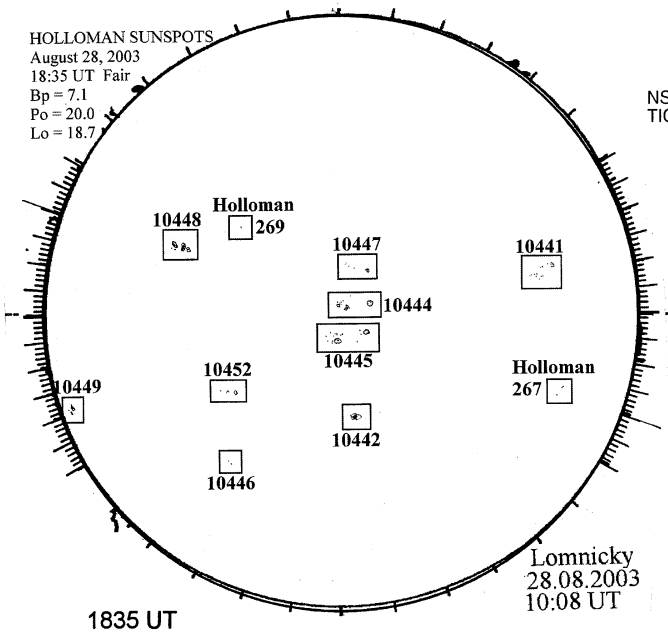

1835 UT
1008 UT LOMN Prom S

SACRAMENTO PEAK CORONA (1.15 Radii)----

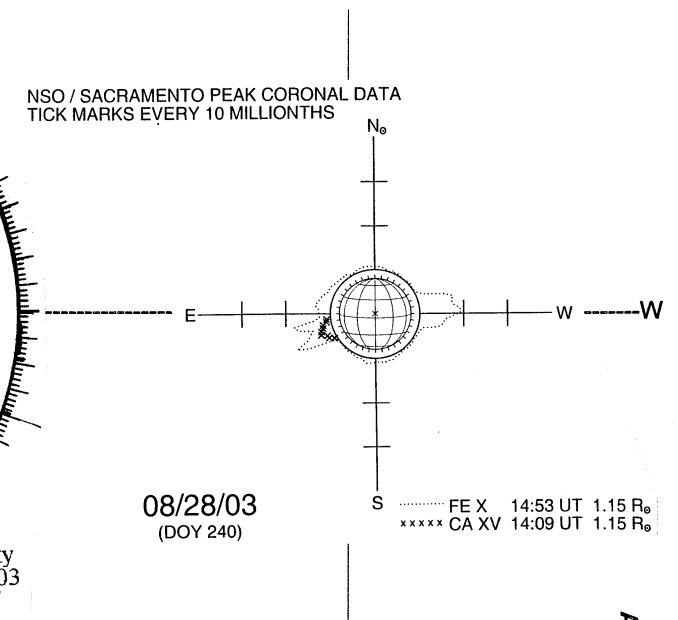

08/28/03
(DOY 240)

S

69
Aug 03