AUGUST 27, 2003 (P= 19.61, Bo = 7.08, Lo = 39.52)

KITT PEAK MAGNETOGRAM

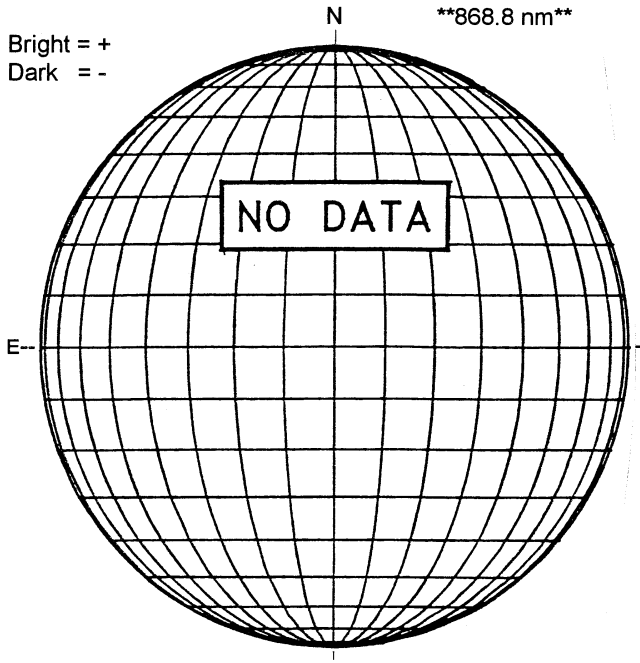

STANFORD MAGNETOGRAM

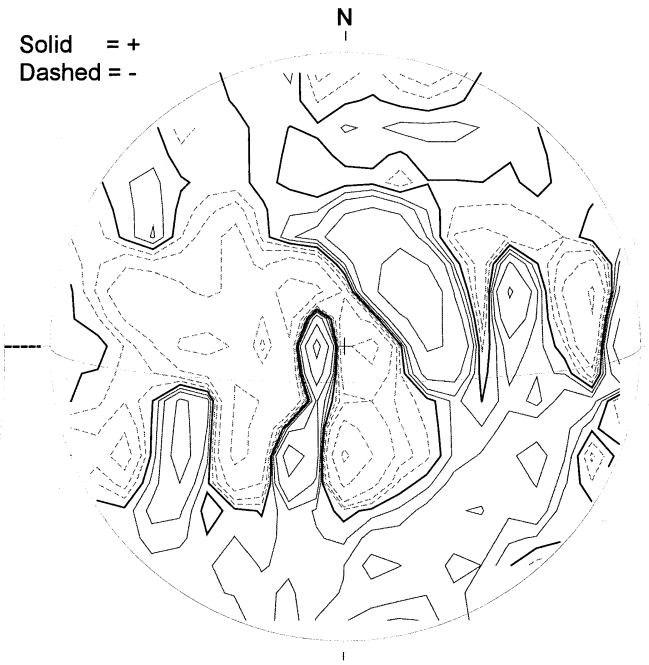

2130 UT

MT. WILSON MAGNETOGRAM

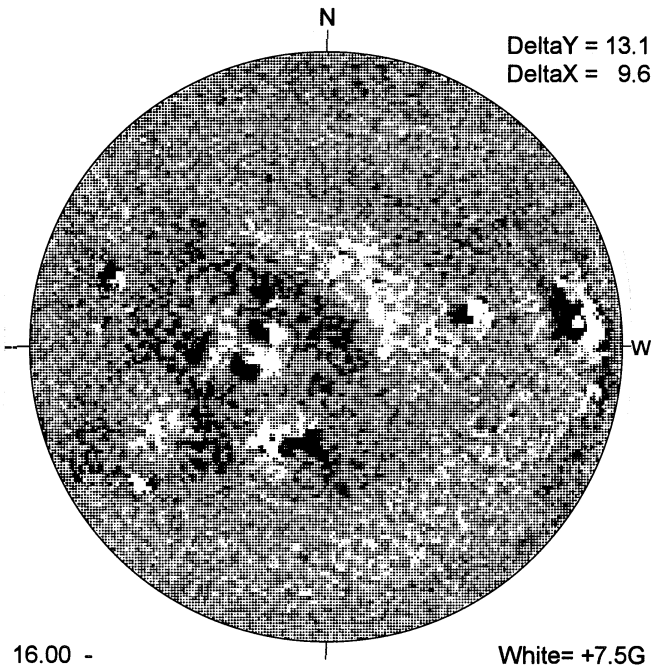

16.00 -
16.93 UT

White= +7.5G
Black = -7.5G

BIG BEAR H-ALPHA

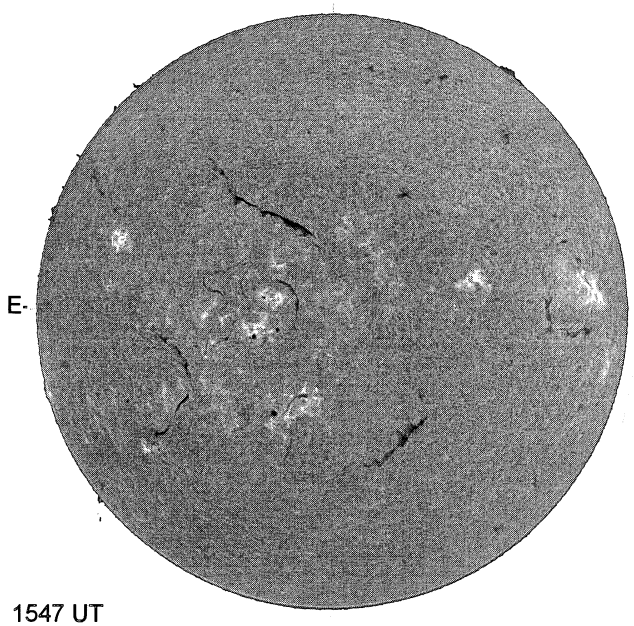

1547 UT

S

HOLLOMAN SUNSPOT

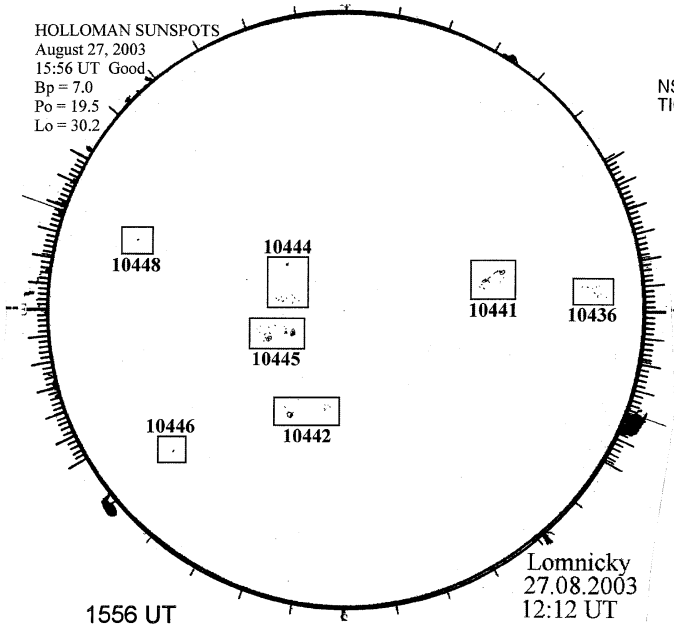

1556 UT
1212 UT LOMN Prom S

SACRAMENTO PEAK CORONA (1.15 Radii)

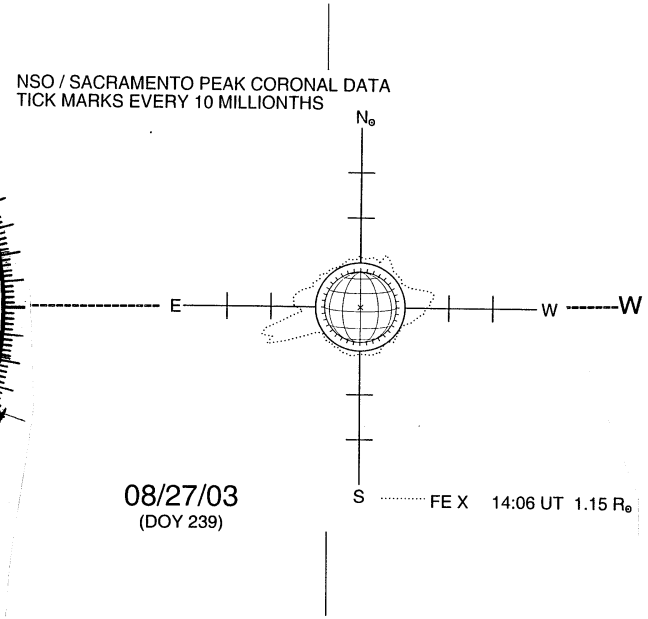

08/27/03
(DOY 239)

S