# AUGUST 25, 2003 ( P= 19.03, Bo = 7.02, Lo = 65.94)

## KITT PEAK MAGNETOGRAM

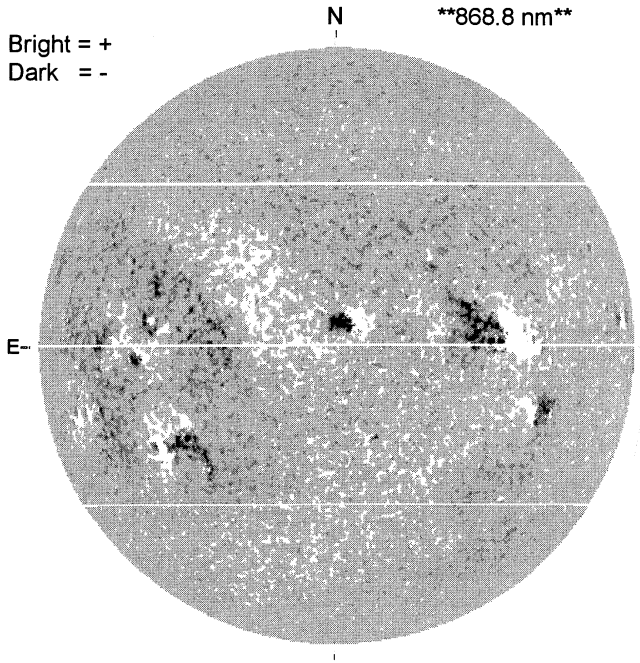


## STANFORD MAGNETOGRAM

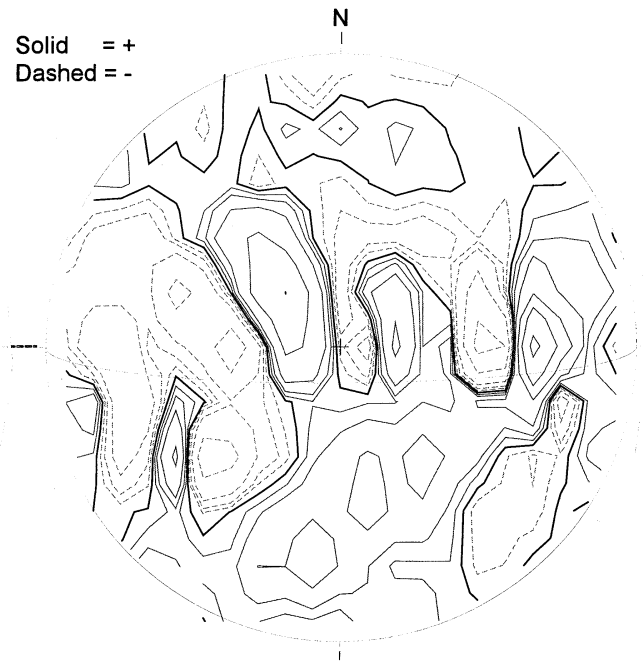


## MT. WILSON MAGNETOGRAM

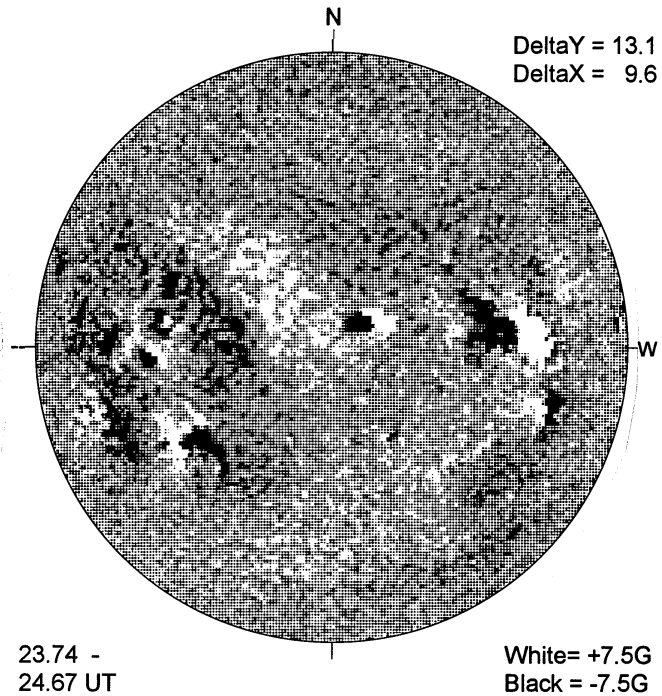


## BIG BEAR H-ALPHA

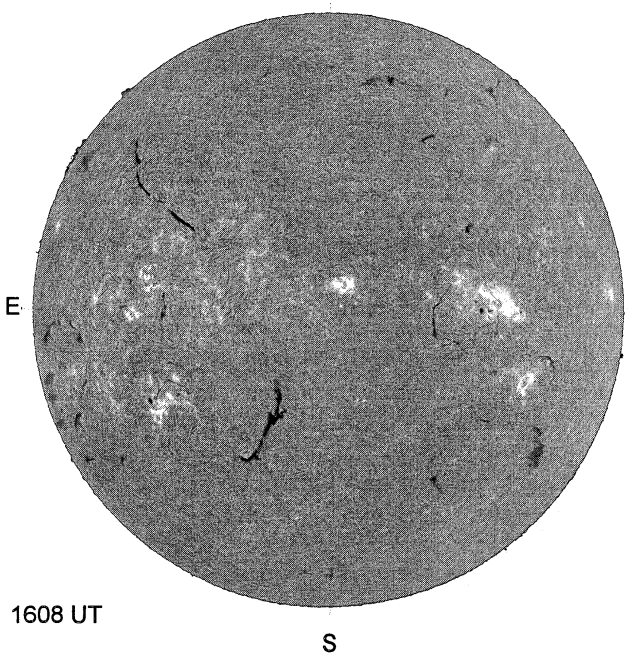


## HOLLOMAN SUNSPOT

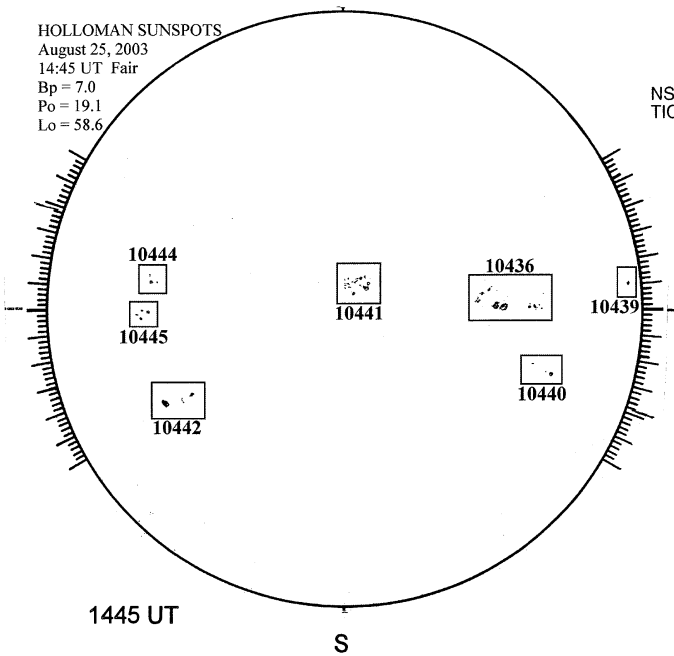

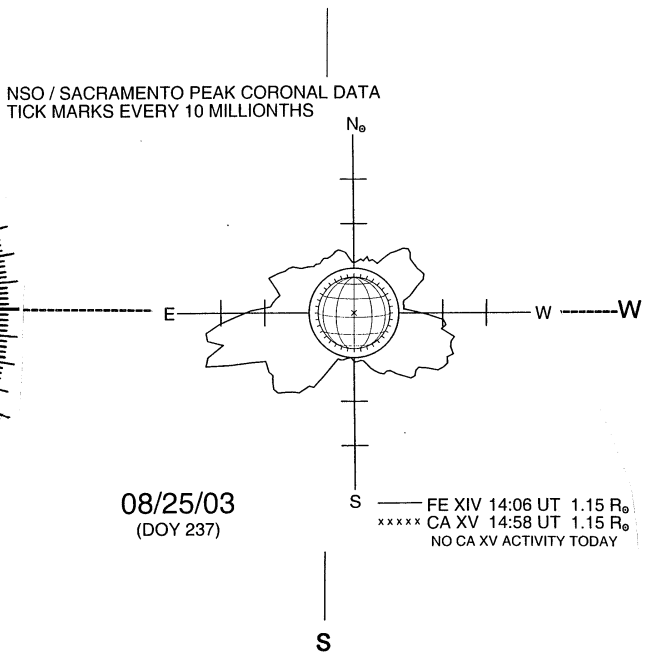
## SACRAMENTO PEAK CORONA (1.15 Radii)