AUGUST 14, 2003 (P= 15.50, Bo = 6.57, Lo = 211.32)

KITT PEAK MAGNETOGRAM

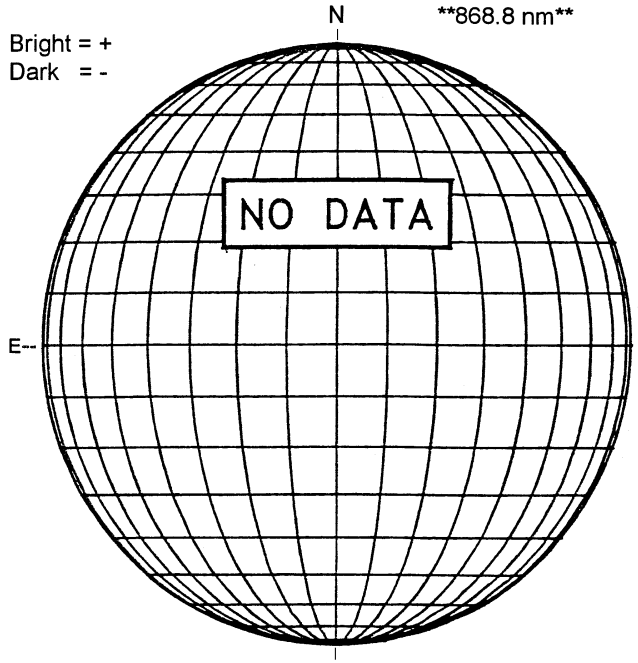

STANFORD MAGNETOGRAM

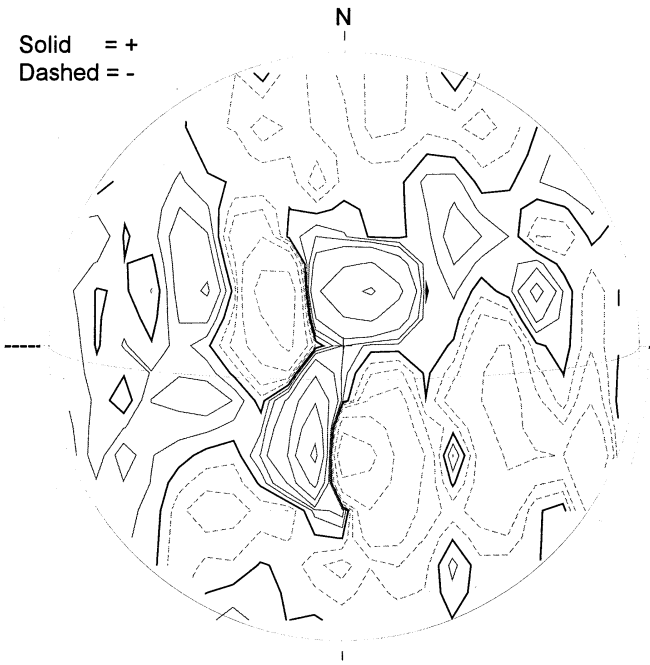

MT. WILSON MAGNETOGRAM

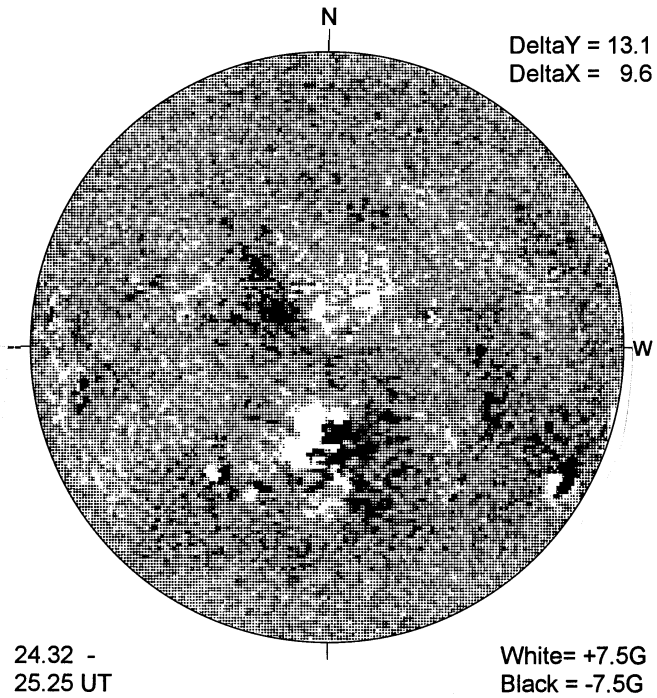

KANZELHOHE H-ALPHA

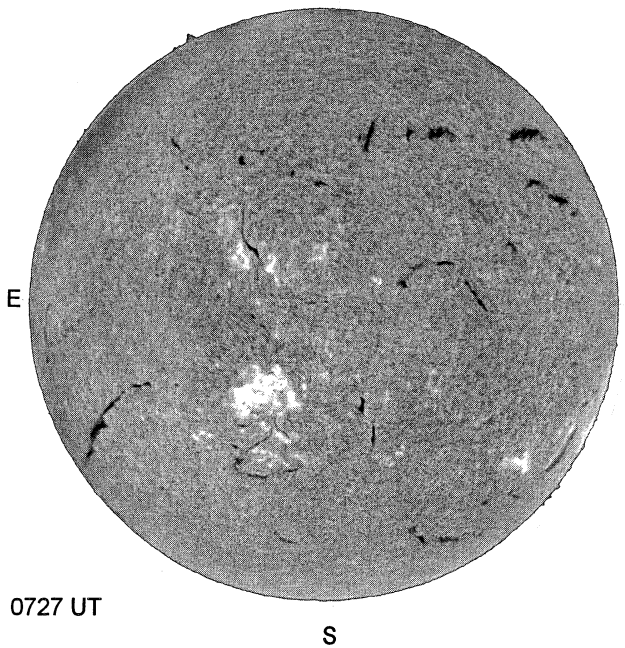

HOLLOMAN SUNSPOT

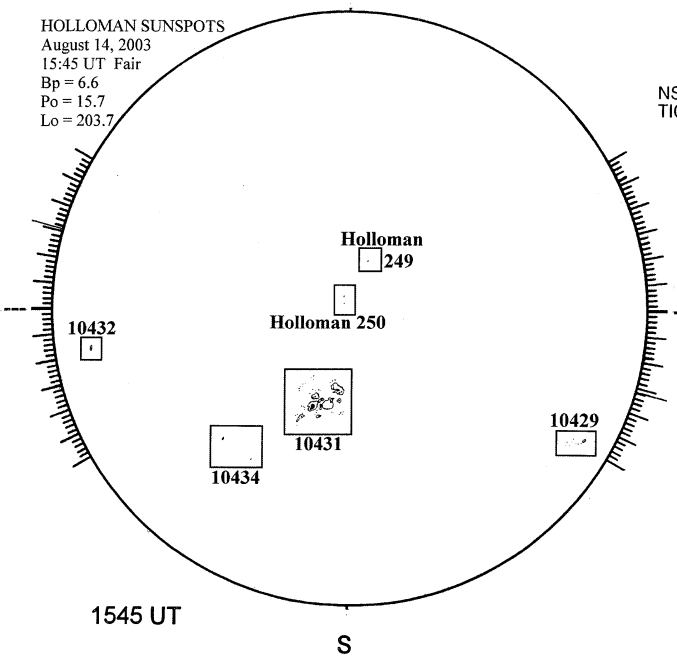
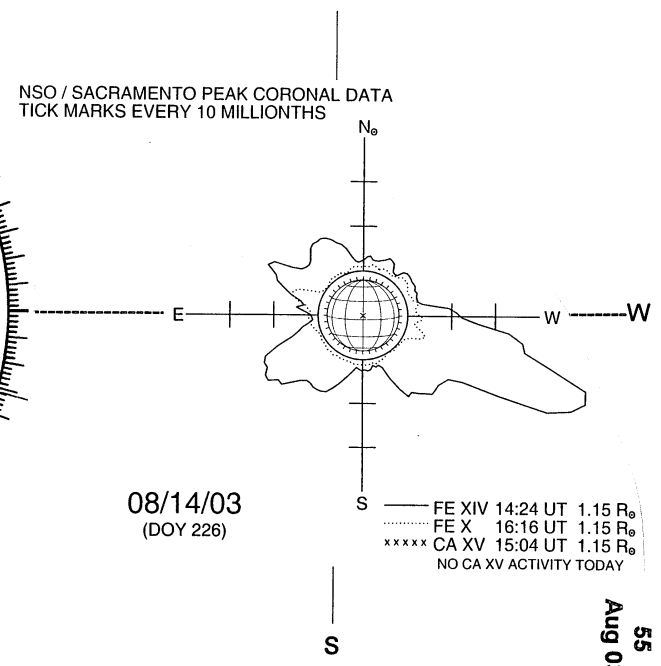
SACRAMENTO PEAK CORONA (1.15 Radii)----