AUGUST 8, 2003 (P= 13.34, Bo = 6.23, Lo = 290.65)

KITT PEAK MAGNETOGRAM

N **868.8 nm**

Bright = +
Dark = -

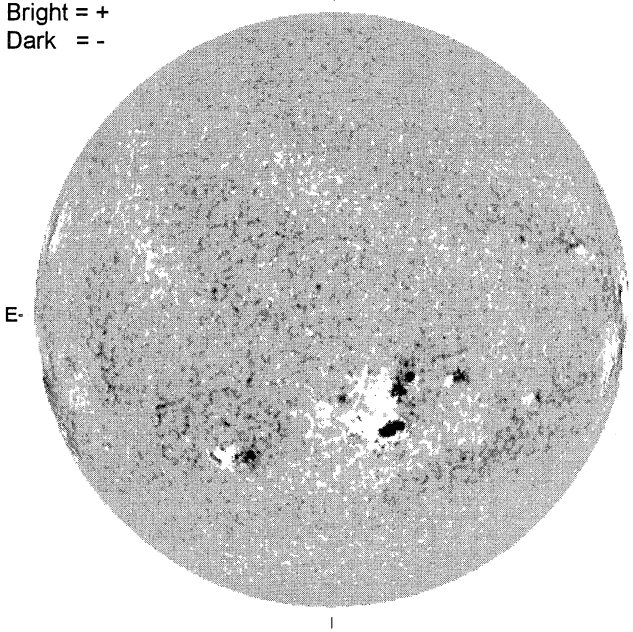

E-

1536 UT

STANFORD MAGNETOGRAM

N

Solid = +
Dashed = -

2140 UT

MT. WILSON MAGNETOGRAM

N

DeltaY = 13.1
DeltaX = 9.6

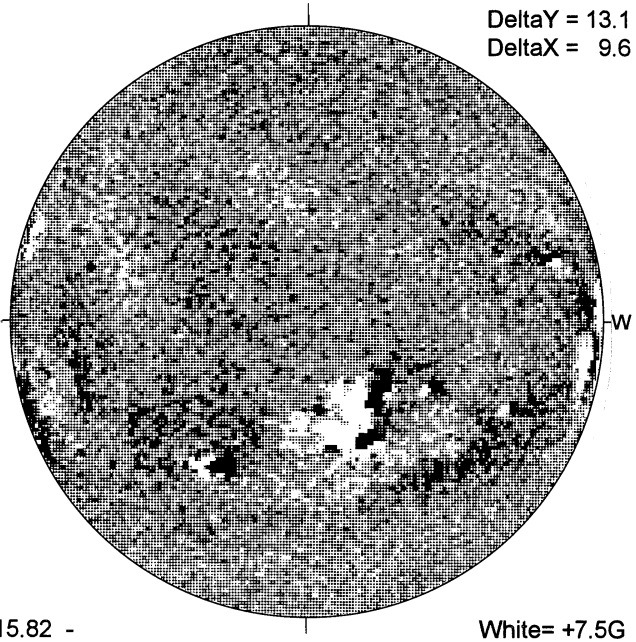

-W

15.82 -
16.75 UT

White= +7.5G
Black = -7.5G

BIG BEAR H-ALPHA

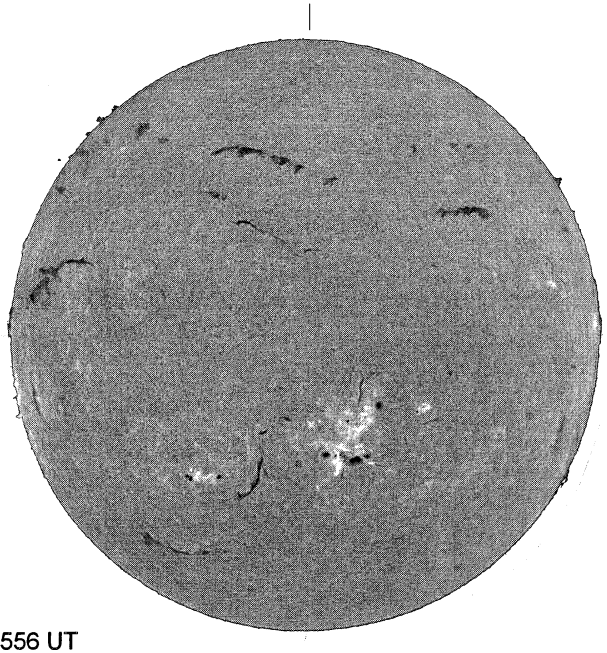

E-

1556 UT

S

HOLLOMAN SUNSPOT

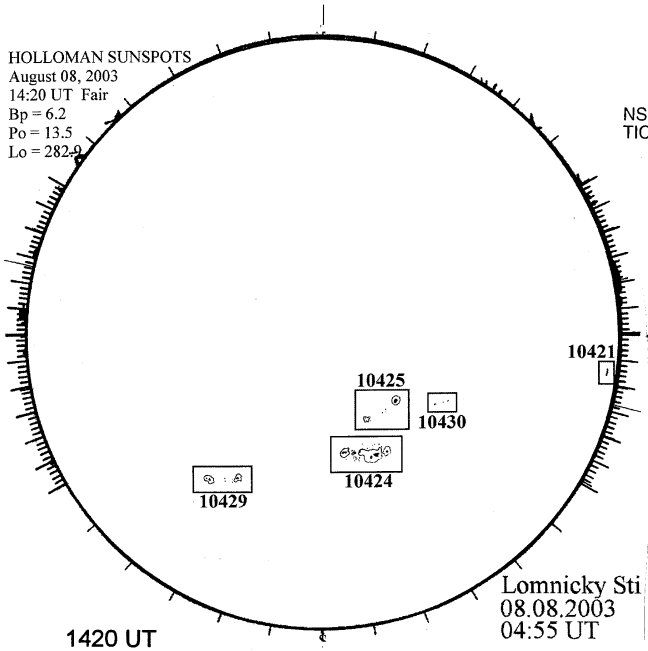

1420 UT
0455 UT LOMN Prom S

SACRAMENTO PEAK CORONA (1.15 Radii)

NSO / SACRAMENTO PEAK CORONAL DATA
TICK MARKS EVERY 10 MILLIONTHS

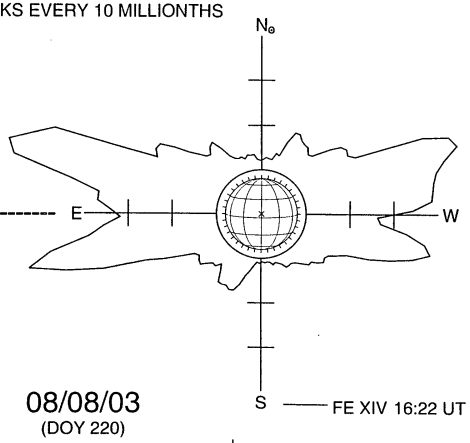

-W

08/08/03
(DOY 220)

FE XIV 16:22 UT 1.15 R☉

S

49
Aug 03