JULY 30, 2003 (P= 9.83, Bo = 5.60, Lo = 49.67)

KITT PEAK MAGNETOGRAM

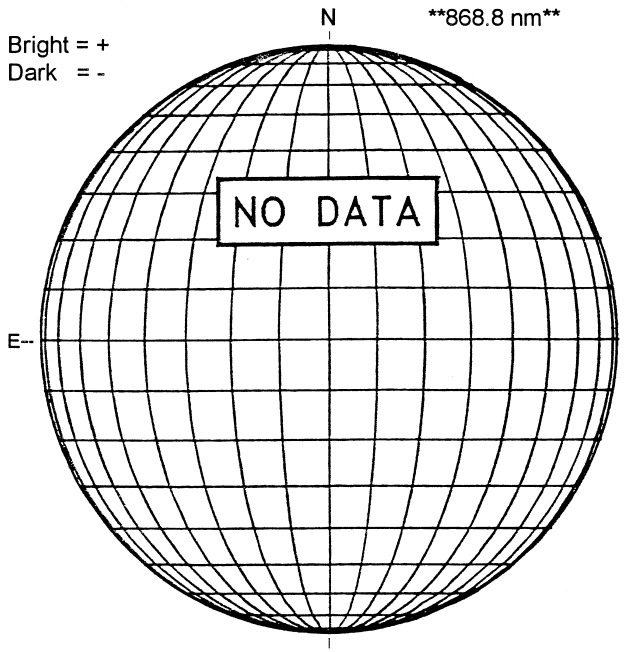

STANFORD MAGNETOGRAM

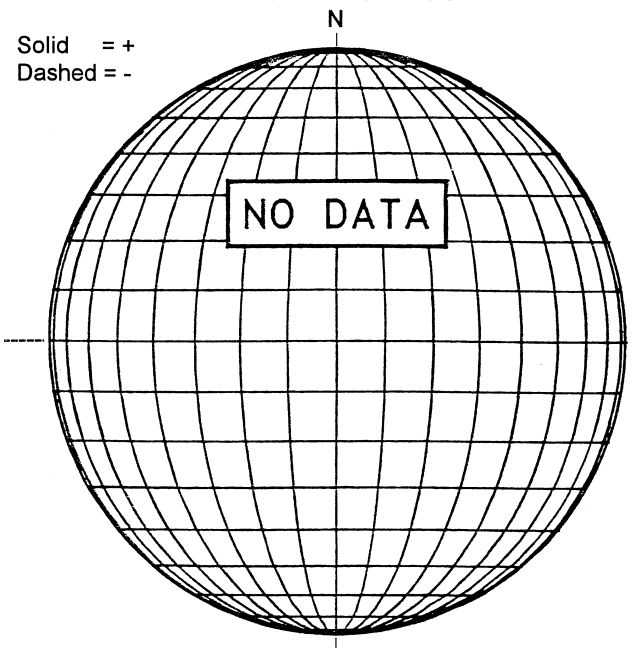

MT. WILSON MAGNETOGRAM

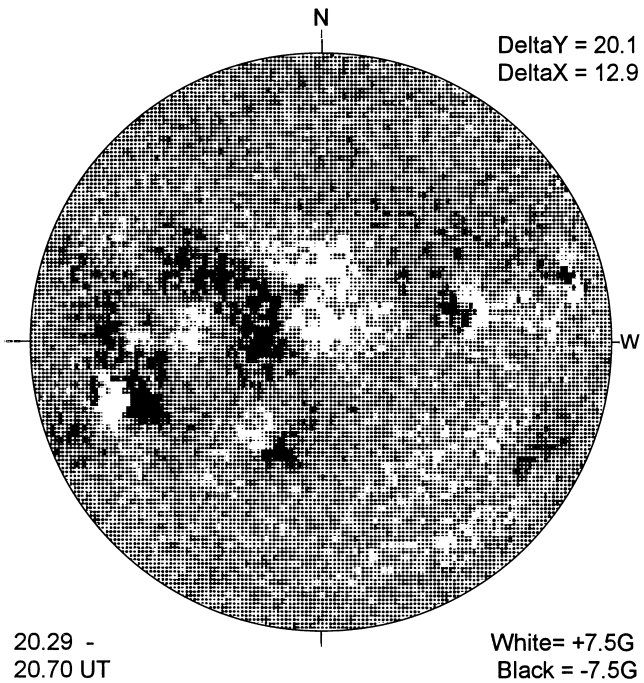

BIG BEAR H-ALPHA

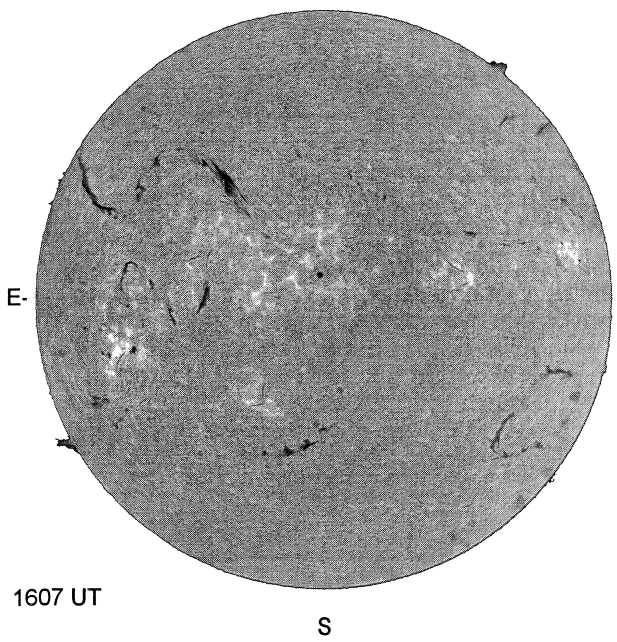

HOLLOMAN SUNSPOT

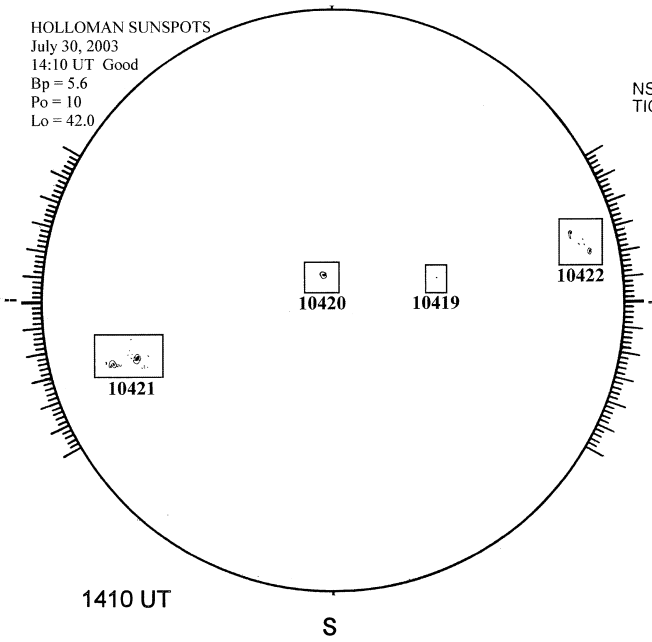

SACRAMENTO PEAK CORONA (1.15 Radii)----

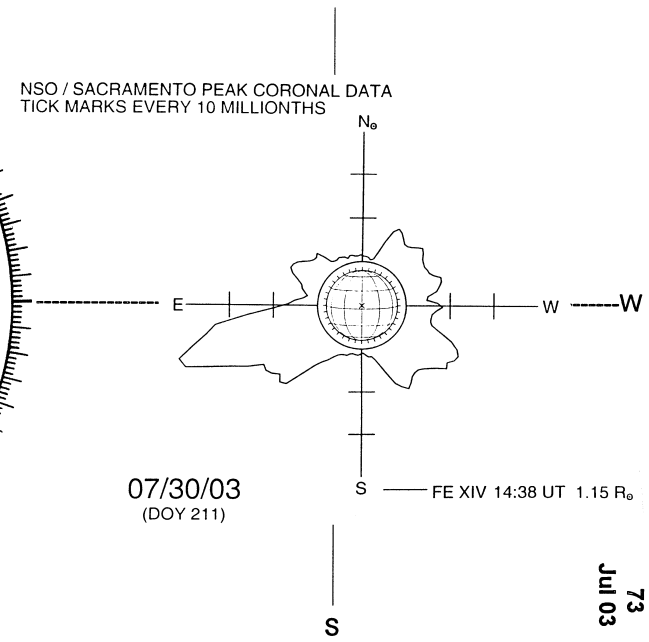

73
Jul 03