JULY 7, 2003 (P= -0.17, Bo = 3.48, Lo = 354.00)

KITT PEAK MAGNETOGRAM

N

868.8 nm

Bright = +
Dark = -

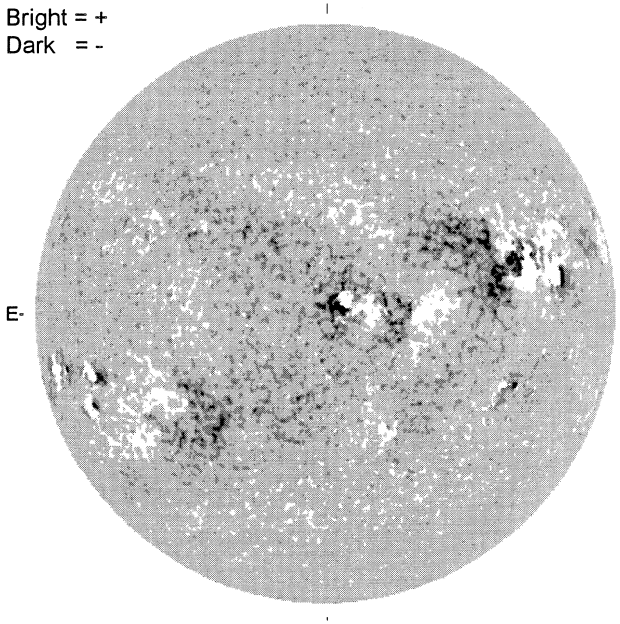

E-

1543 UT

STANFORD MAGNETOGRAM

N

Solid = +
Dashed = -

2110 UT

MT. WILSON MAGNETOGRAM

N

DeltaY = 13.1
DeltaX = 9.6

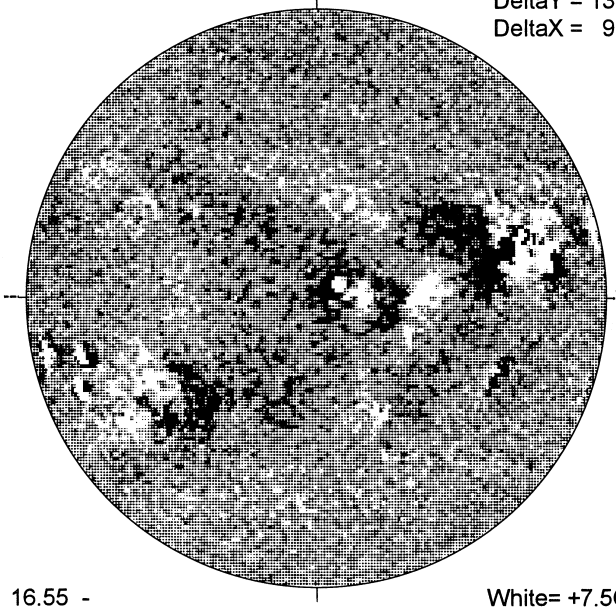

-W

16.55 -
17.47 UT

White= +7.5G
Black = -7.5G

BIG BEAR H-ALPHA

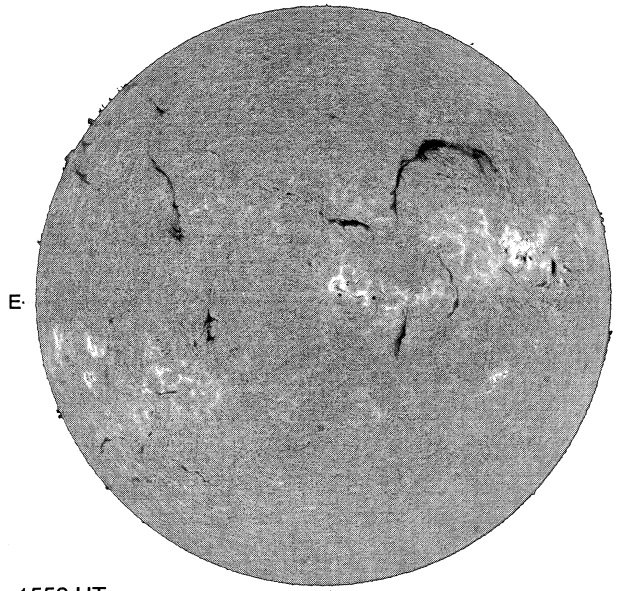

E-

1556 UT

S

HOLLOMAN SUNSPOTS

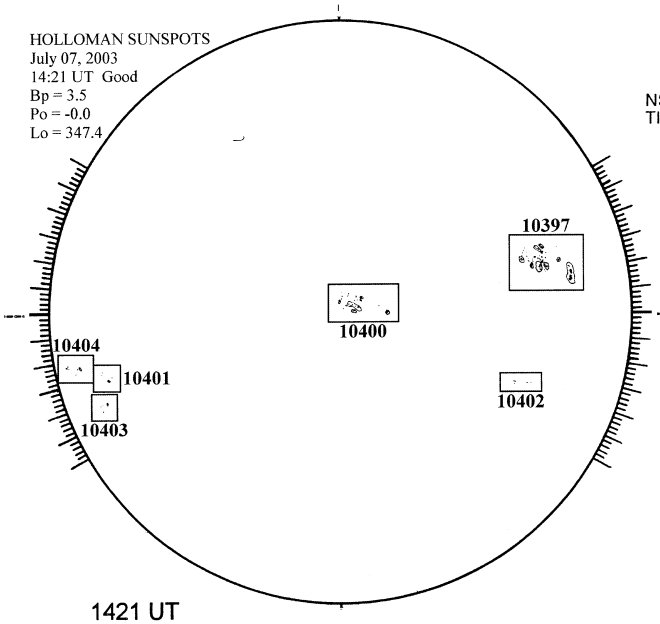

1421 UT

S

SACRAMENTO PEAK CORONA (1.15 Radii)

NSO / SACRAMENTO PEAK CORONAL DATA
TICK MARKS EVERY 10 MILLIONTHS

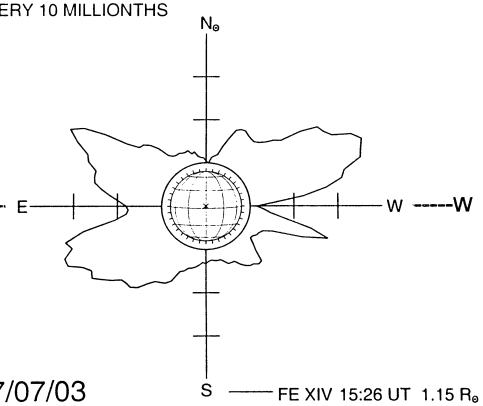

07/07/03
(DOY 188)

FE XIV 15:26 UT 1.15 R⊙

S