# JULY 3, 2003 ( P= -1.99, Bo = 3.04, Lo = 46.94)

## KITT PEAK MAGNETOGRAM

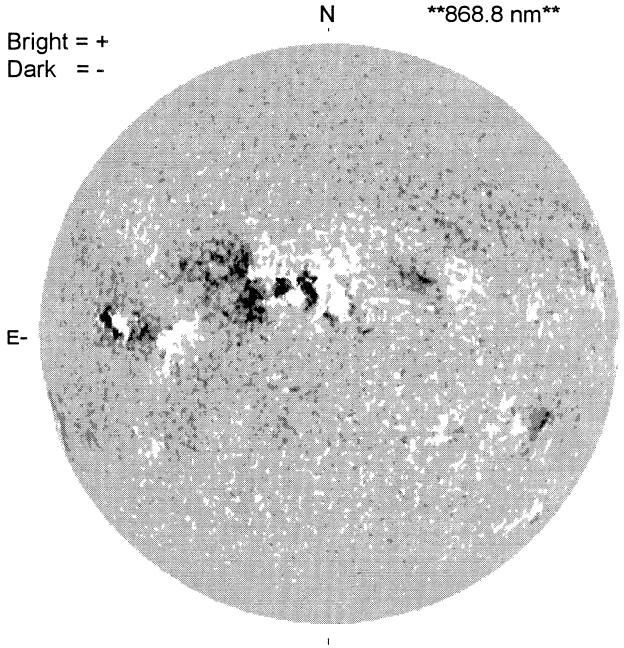


## STANFORD MAGNETOGRAM

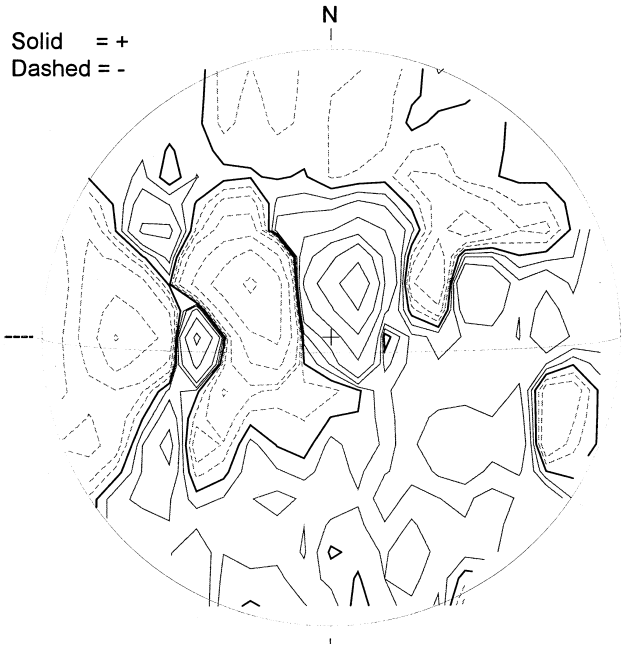


## MT. WILSON MAGNETOGRAM

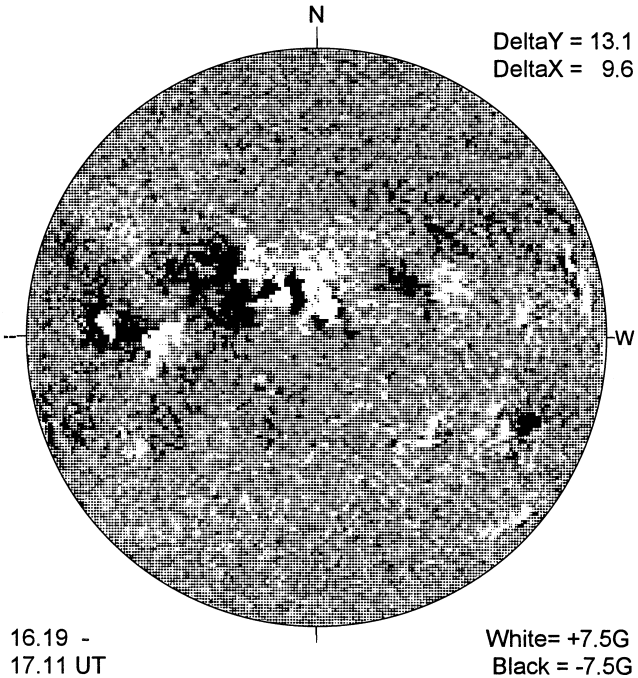


## BIG BEAR H-ALPHA

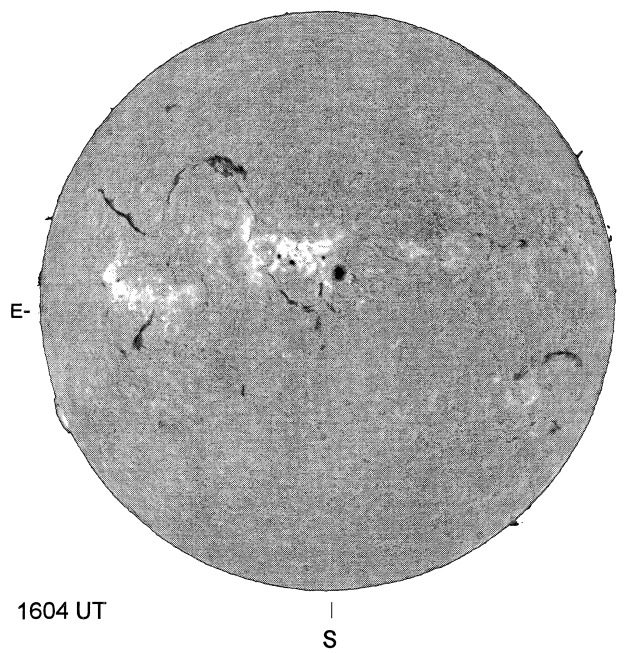


## HOLLOMAN SUNSPOT

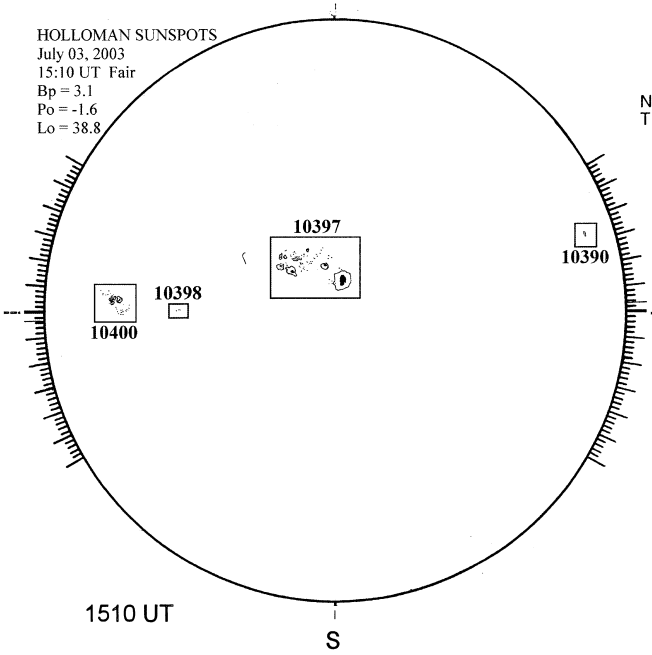

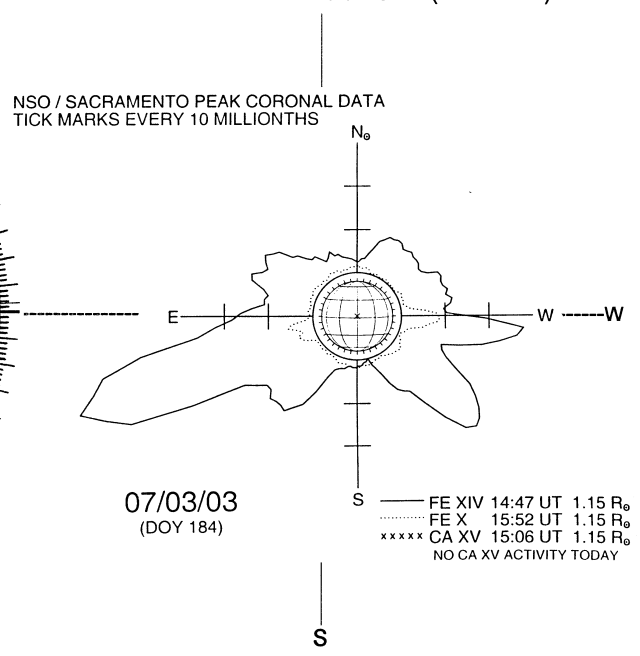
## SACRAMENTO PEAK CORONA (1.15 Radii)