JUNE 23, 2003 (P= -6.50, Bo = 1.91, Lo = 179.30)

KITT PEAK MAGNETOGRAM

868.8 nm

Bright = +
Dark = -

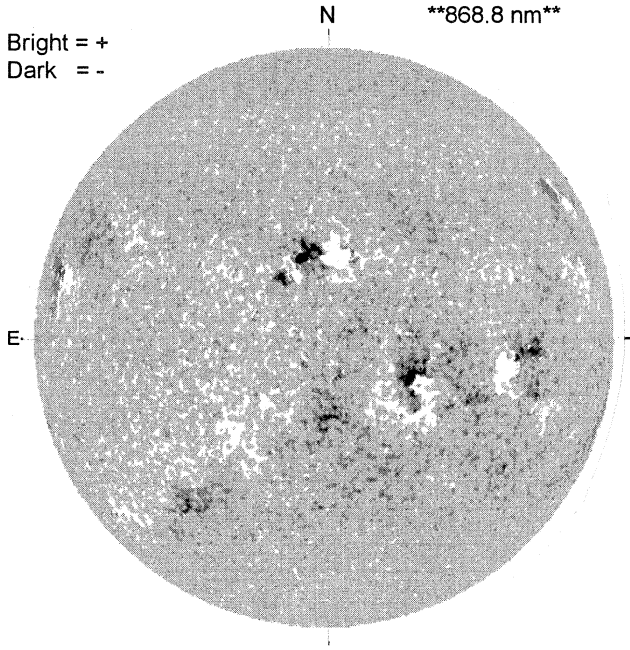

1607 UT

STANFORD MAGNETOGRAM

Solid = +
Dashed = -

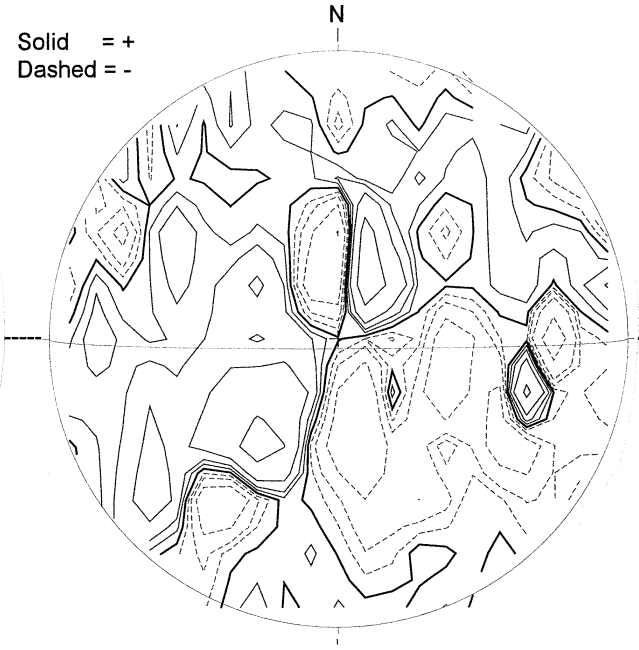

2053 UT

MT. WILSON MAGNETOGRAM

DeltaY = 13.1
DeltaX = 9.6

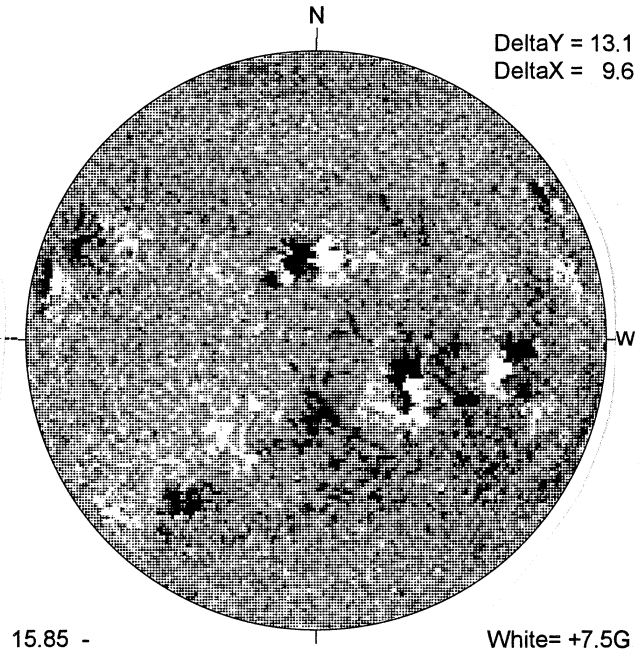

15.85 -
16.77 UT

White= +7.5G
Black = -7.5G

BIG BEAR H-ALPHA

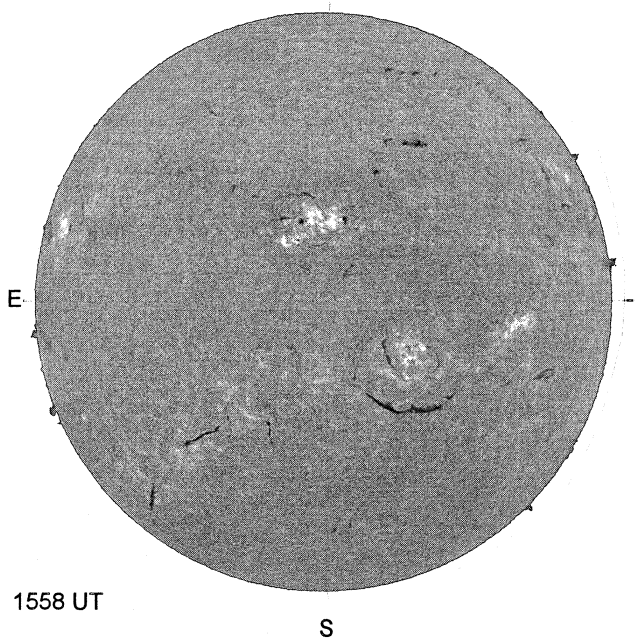

1558 UT

HOLLOMAN SUNSPOT

HOLLOMAN SUNSPOTS
June 23, 2003
13:56 UT Good
Bp = 1.9
Po = -6.2
Lo = 172.6

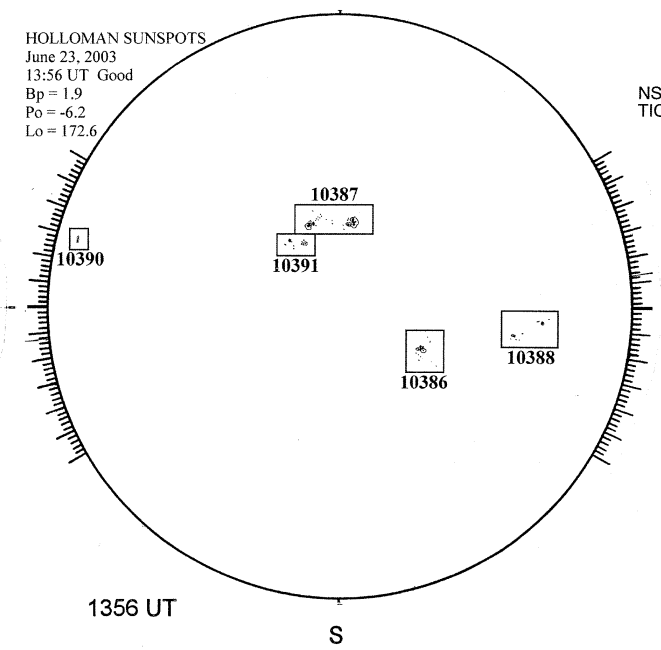

1356 UT

SACRAMENTO PEAK CORONA (1.15 Radii)

NSO / SACRAMENTO PEAK CORONAL DATA
TICK MARKS EVERY 10 MILLIONTHS

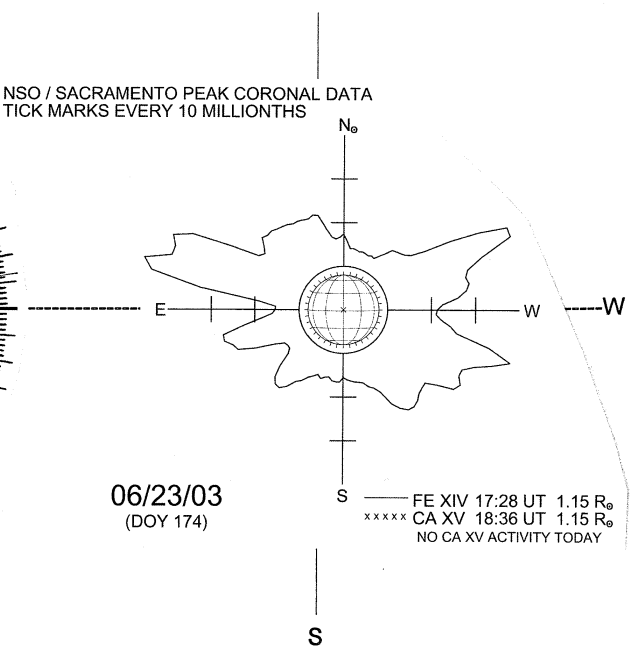

06/23/03
(DOY 174)

FE XIV 17:28 UT 1.15 R⊙
xxxxx CA XV 18:36 UT 1.15 R⊙
NO CA XV ACTIVITY TODAY