JUNE 13, 2003 (P= -10.84, Bo = 0.73, Lo = 311.67)

KITT PEAK MAGNETOGRAM

N **868.8 nm**

Bright = +
Dark = -

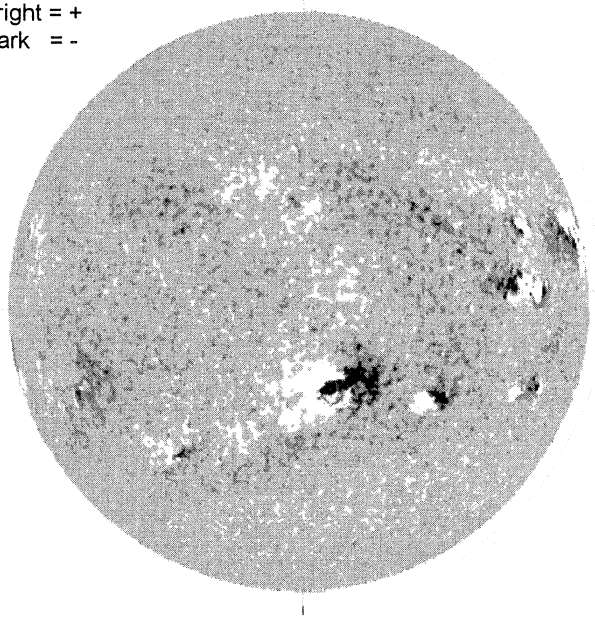

E

1557 UT

STANFORD MAGNETOGRAM

N

Solid = +
Dashed = -

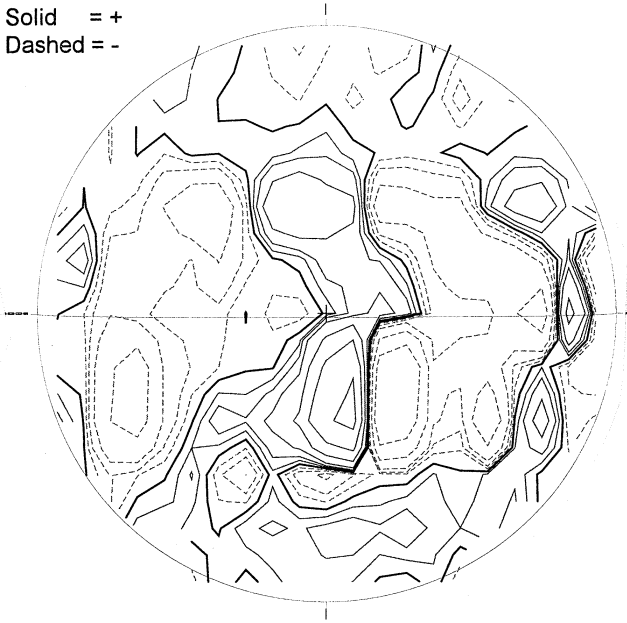

1926 UT

MT. WILSON MAGNETOGRAM

N

DeltaY = 13.1
DeltaX = 9.6

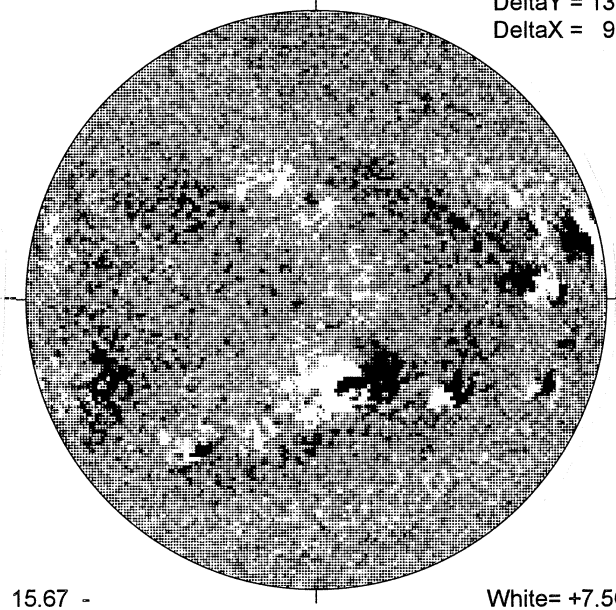

W

15.67 -
16.59 UT

White= +7.5G
Black = -7.5G

BIG BEAR H-ALPHA

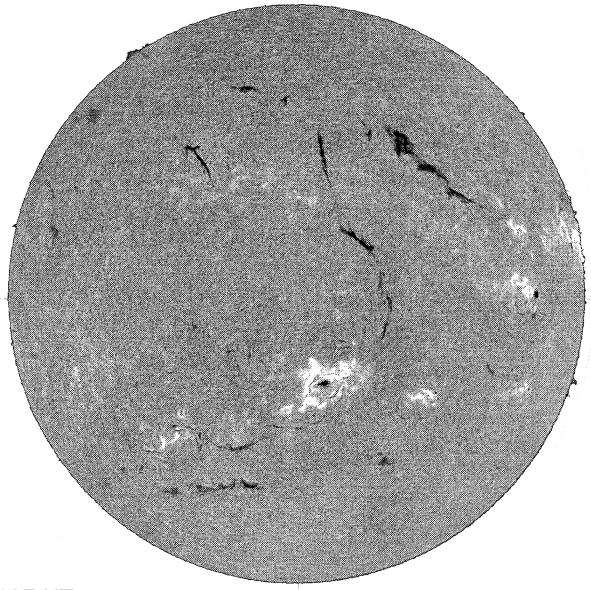

E

1637 UT

S

HOLLOMAN SUNSPOT

HOLLOMAN SUNSPOTS
June 13, 2003
15:12 UT Fair
Bp = 0.8
Po = -10.5
Lo = 303.5

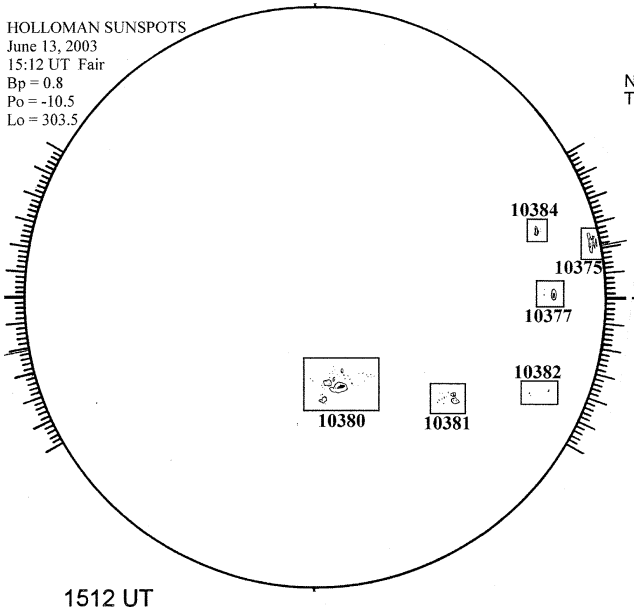

1512 UT

S

SACRAMENTO PEAK CORONA (1.15 Radii)

NSO / SACRAMENTO PEAK CORONAL DATA
TICK MARKS EVERY 10 MILLIONTHS

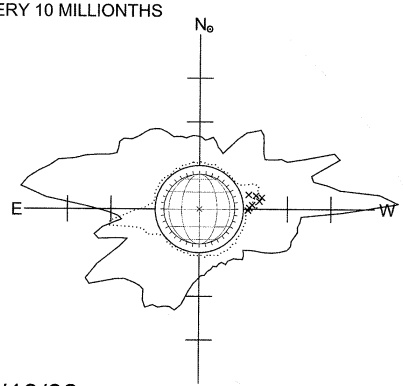

06/13/03
(DOY 164)

FE XIV 15:14 UT 1.15 R⊙
FE X 16:17 UT 1.15 R⊙
xxxxx CA XV 16:00 UT 1.15 R⊙

S