JUNE 11, 2003 (P= -11.67, Bo = 0.49, Lo = 338.15)

KITT PEAK MAGNETOGRAM

N **868.8 nm**

Bright = +
Dark = -

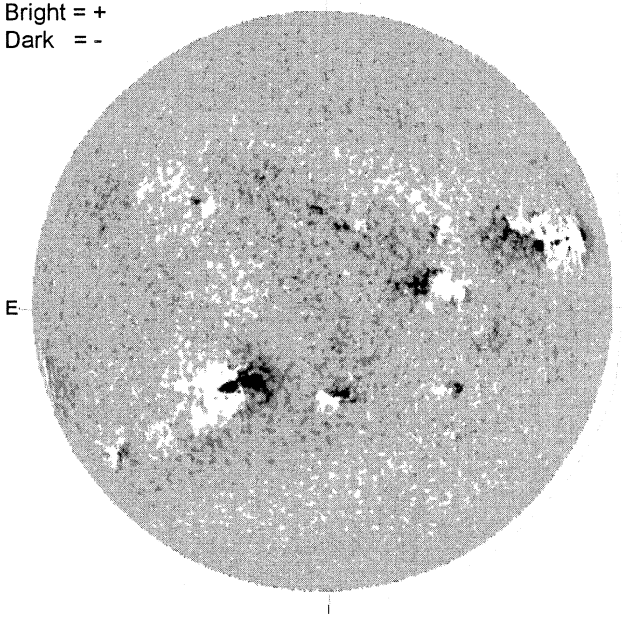

E

1528 UT

STANFORD MAGNETOGRAM

N

Solid = +
Dashed = -

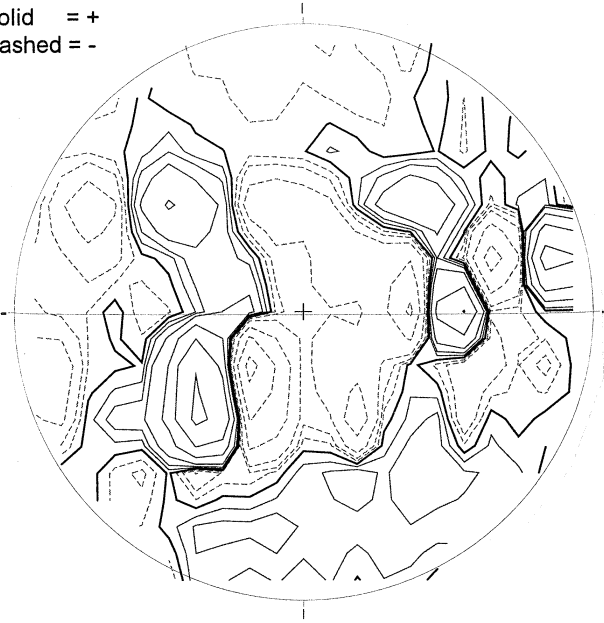

2136 UT

MT. WILSON MAGNETOGRAM

N

DeltaY = 13.1
DeltaX = 9.6

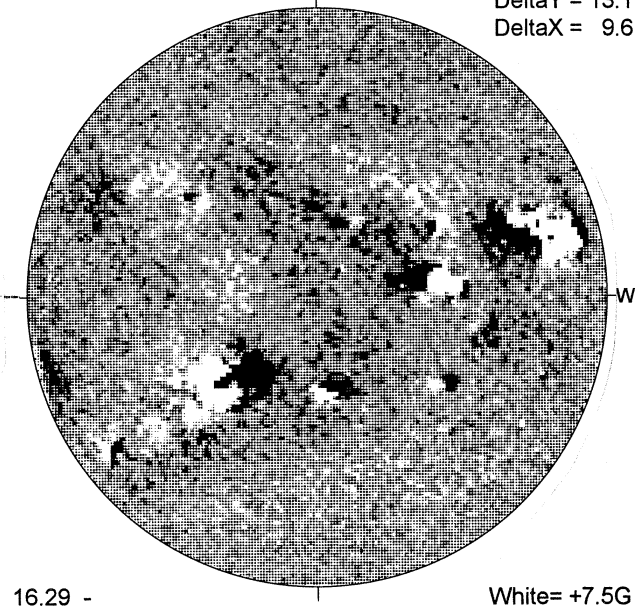

W

16.29 -
17.21 UT

White= +7.5G
Black = -7.5G

BIG BEAR H-ALPHA

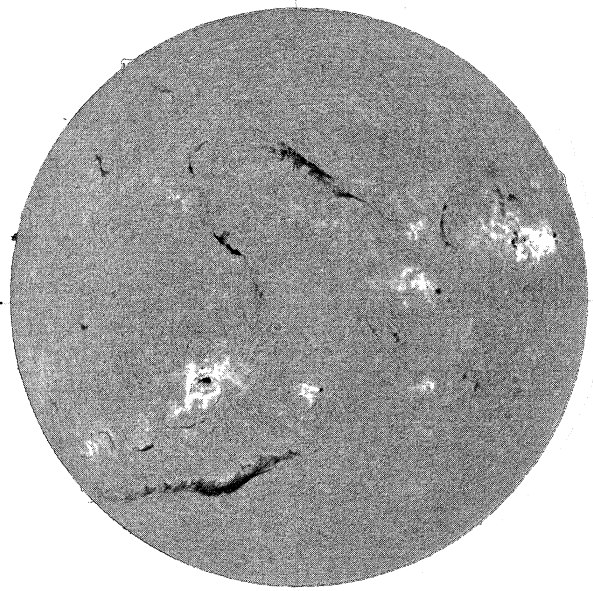

E

1610 UT

S

HOLLOMAN SUNSPOTS

HOLLOMAN SUNSPOTS
June 11, 2003
13:45 UT Fair
Bp = 0.5
Po = -11.4
Lo = 330.8

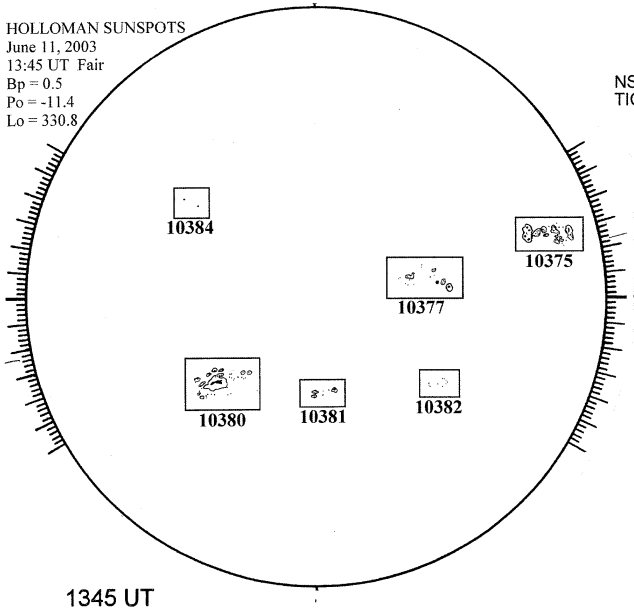

1345 UT

S

SACRAMENTO PEAK CORONA (1.15 Radii)

NSO / SACRAMENTO PEAK CORONAL DATA
TICK MARKS EVERY 10 MILLIONTHS

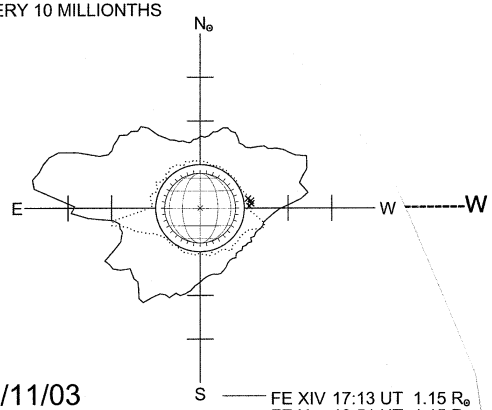

06/11/03
(DOY 162)

FE XIV 17:13 UT 1.15 R⊙
FE X 18:51 UT 1.15 R⊙
xxxxx CA XV 18:29 UT 1.15 R⊙

S