# MAY 29, 2003 ( P= -16.69, Bo = -1.08, Lo = 150.19)

## KITT PEAK MAGNETOGRAM

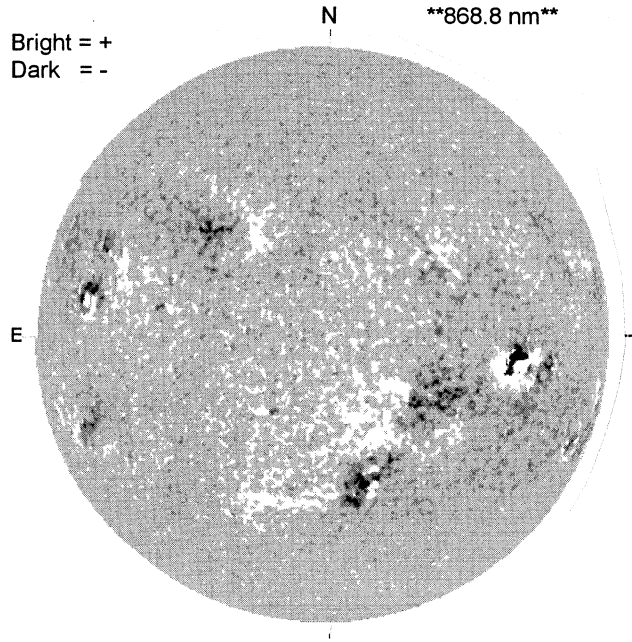


## STANFORD MAGNETOGRAM

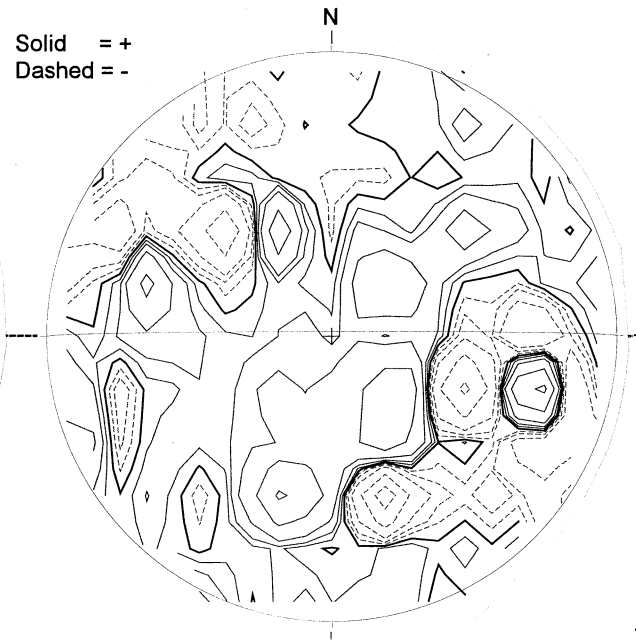


## MT. WILSON MAGNETOGRAM

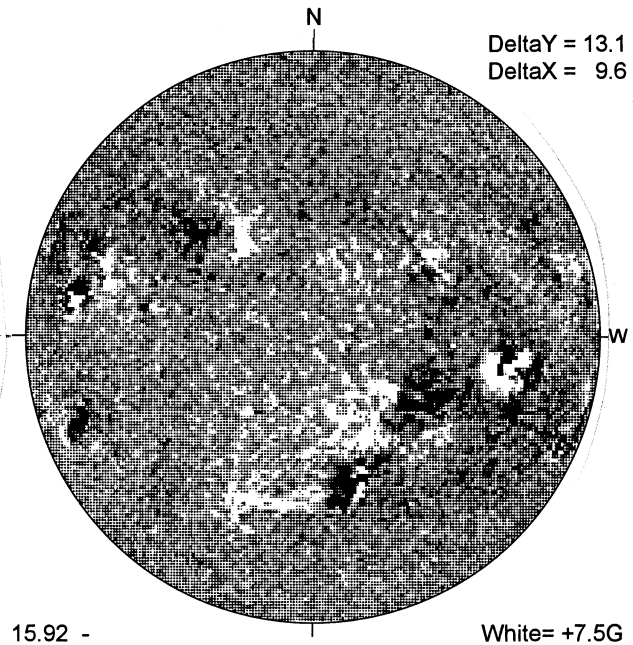


## BIG BEAR H-ALPHA

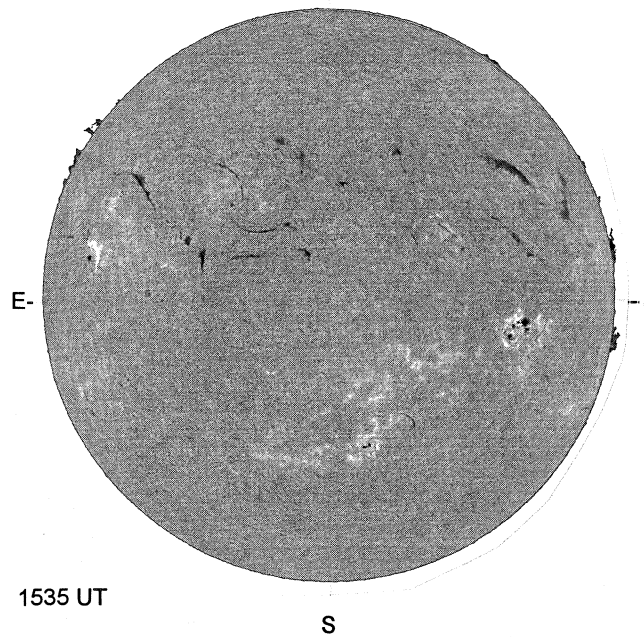


## HOLLOMAN SUNSPOT

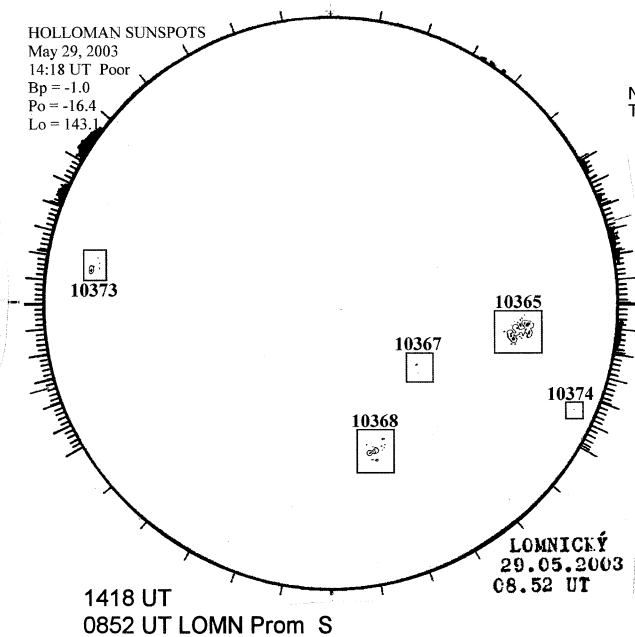

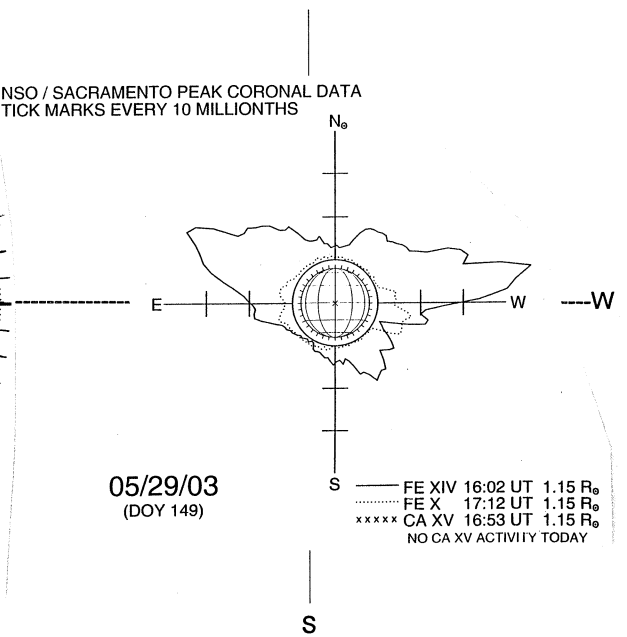
## SACRAMENTO PEAK CORONA (1.15 Radii)