MAY 28, 2003 (P= -17.04, Bo = -1.20, Lo = 163.42)

KITT PEAK MAGNETOGRAM

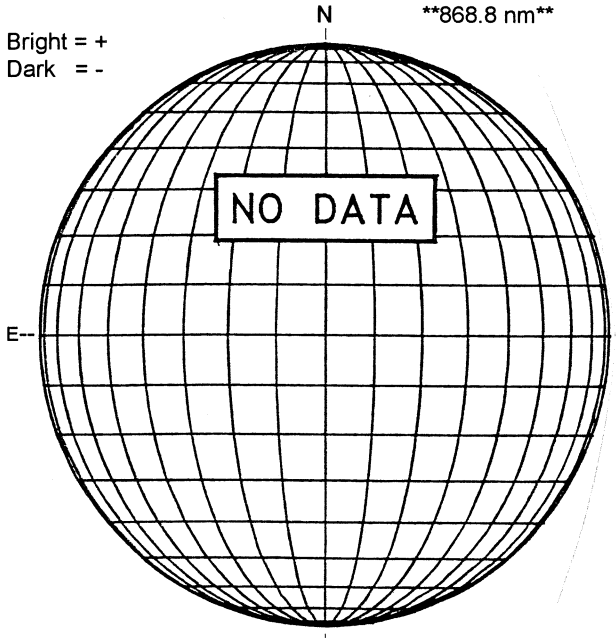

STANFORD MAGNETOGRAM

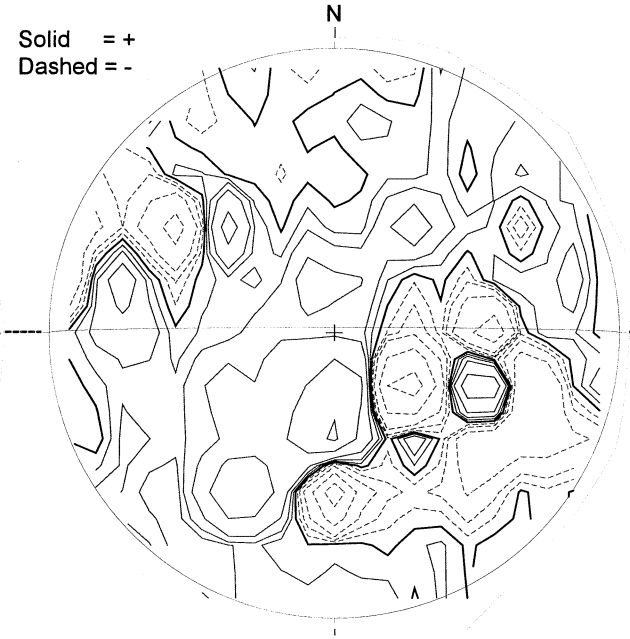

2207 UT

MT. WILSON MAGNETOGRAM

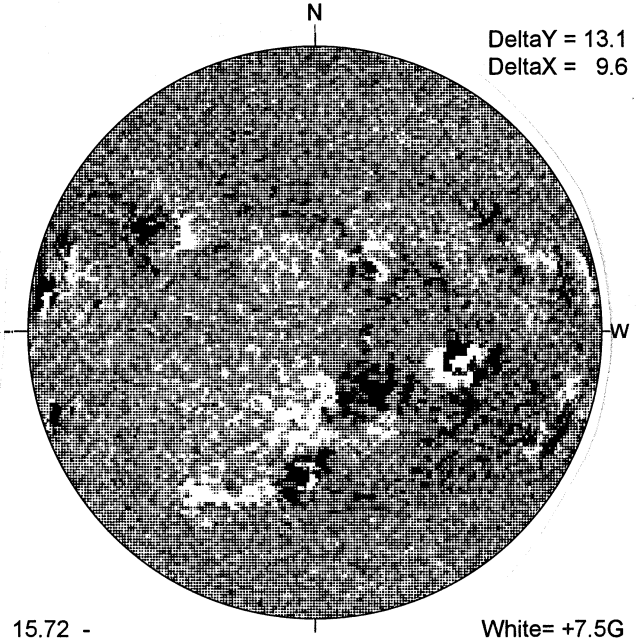

15.72 -
16.65 UT

White= +7.5G
Black = -7.5G

BIG BEAR H-ALPHA

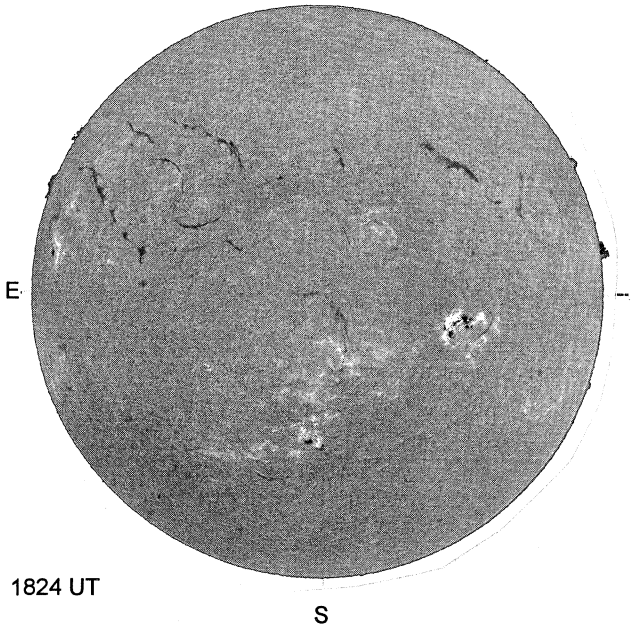

1824 UT

S

HOLLOMAN SUNSPOT

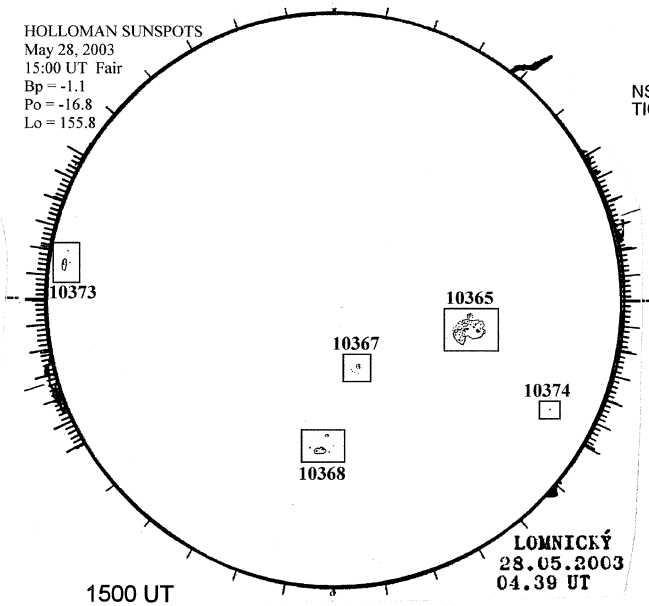

1500 UT
0439 UT LOMN Prom S

SACRAMENTO PEAK CORONA (1.15 Radii)----

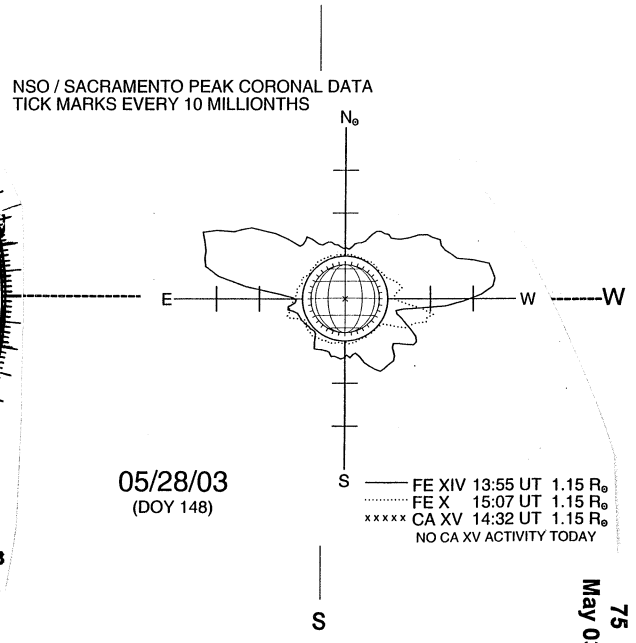

05/28/03
(DOY 148)

S