MAY 19, 2003 (P= -19.96, Bo = -2.26, Lo = 282.49)

KITT PEAK MAGNETOGRAM

868.8 nm

Bright = +
Dark = -

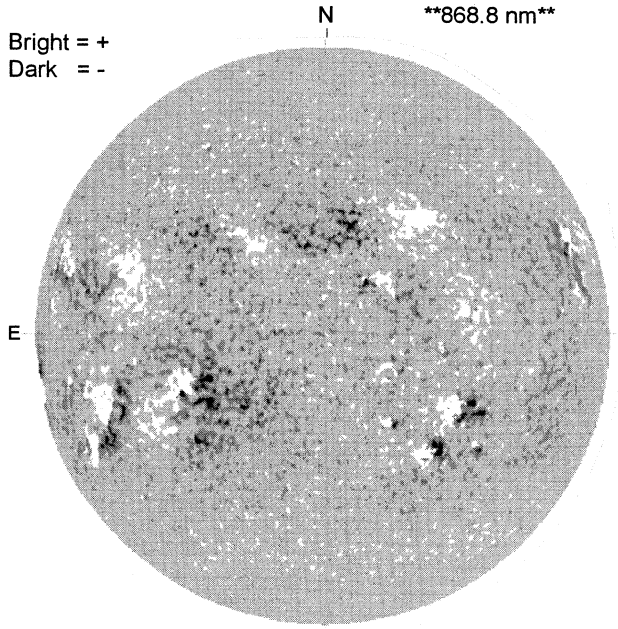

1545 UT

STANFORD MAGNETOGRAM

Solid = +
Dashed = -

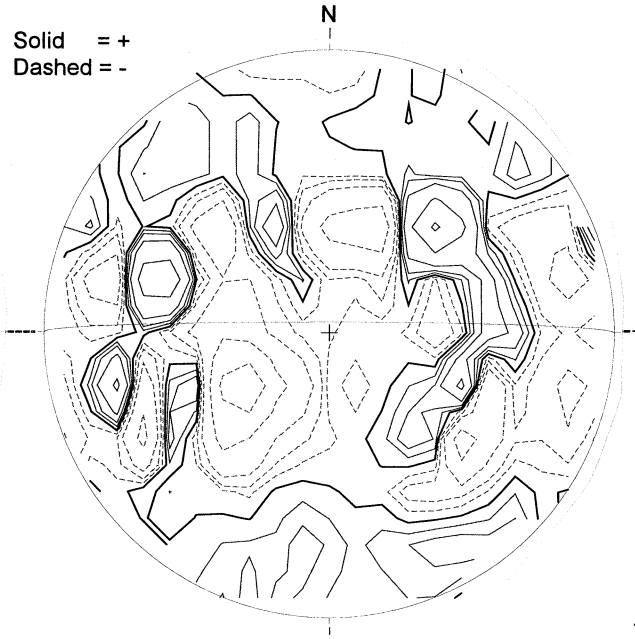

2153 UT

MT. WILSON MAGNETOGRAM

DeltaY = 13.1
DeltaX = 9.6

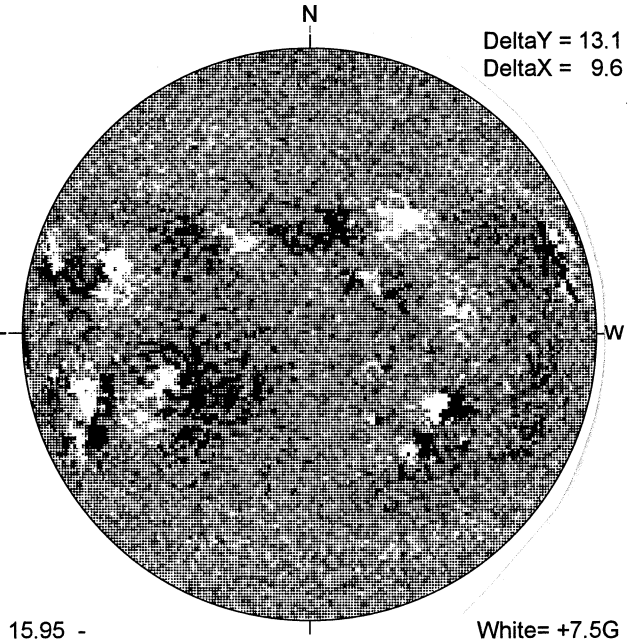

15.95 -
16.88 UT

White= +7.5G
Black = -7.5G

BIG BEAR H-ALPHA

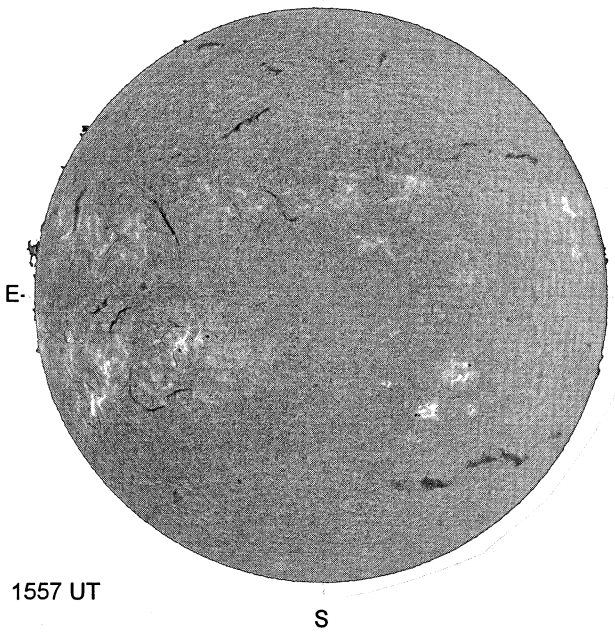

1557 UT

HOLLOMAN SUNSPOT

HOLLOMAN SUNSPOTS
May 19, 2003
14:40 UT Fair
Bp = -2.1
Po = -19.7
Lo = 275.3

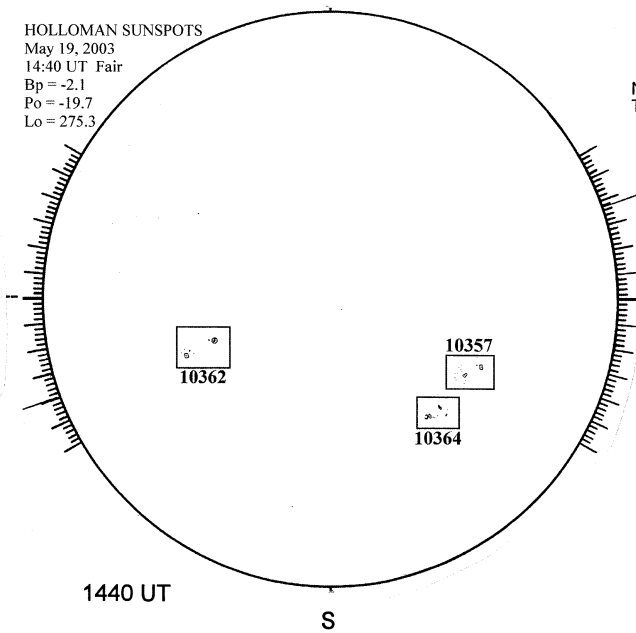

1440 UT

SACRAMENTO PEAK CORONA (1.15 Radii)

NSO / SACRAMENTO PEAK CORONAL DATA
TICK MARKS EVERY 10 MILLIONTHS

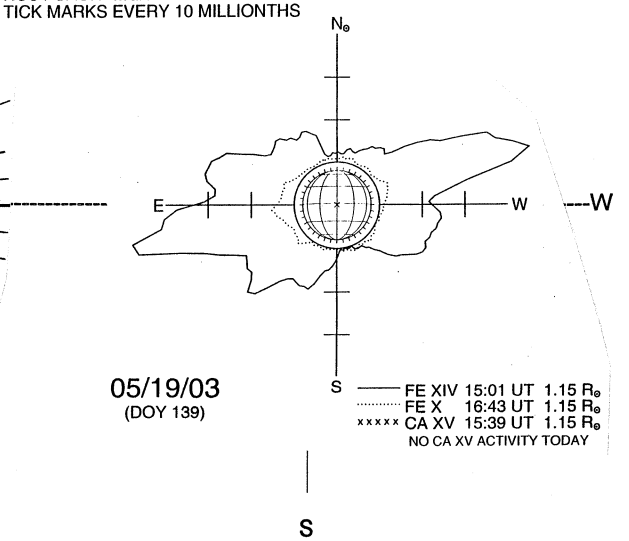

05/19/03
(DOY 139)

FE XIV 15:01 UT 1.15 R⊙
FE X 16:43 UT 1.15 R⊙
xxxxx CA XV 15:39 UT 1.15 R⊙
NO CA XV ACTIVITY TODAY