MAY 13, 2003 (P= -21.63, Bo = -2.94, Lo = 1.85)

KITT PEAK MAGNETOGRAM

868.8 nm

Bright = +
Dark = -

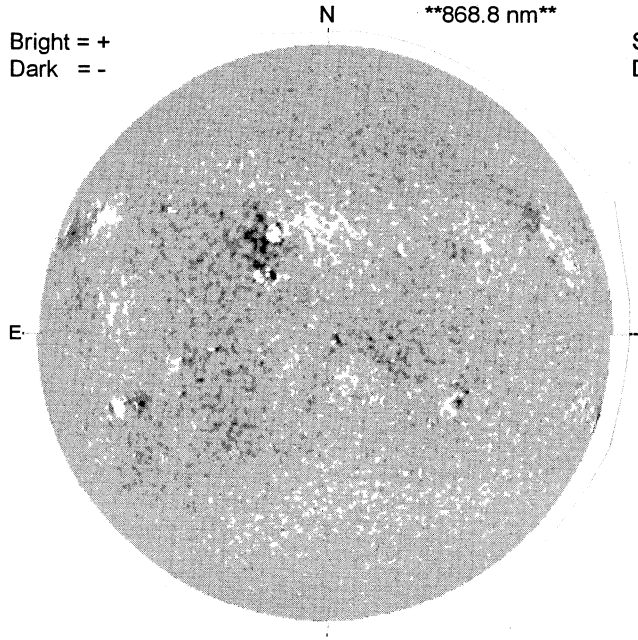

1658 UT

STANFORD MAGNETOGRAM

Solid = +
Dashed = -

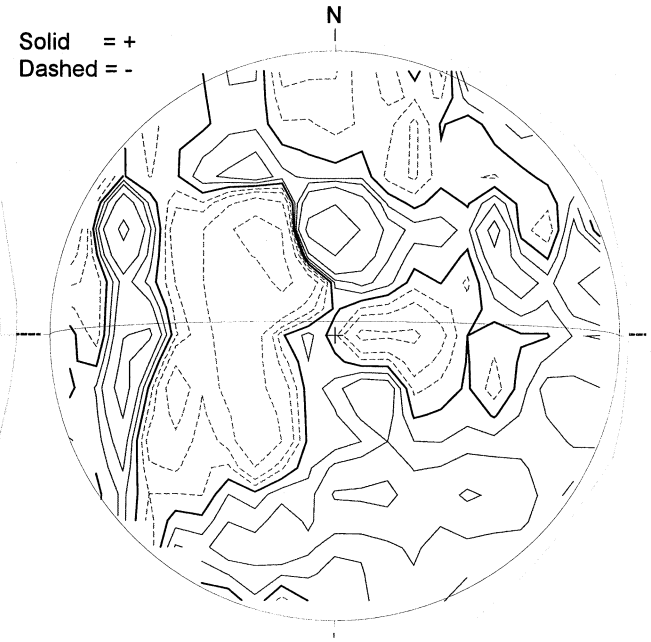

2147 UT

MT. WILSON MAGNETOGRAM

DeltaY =
DeltaX =

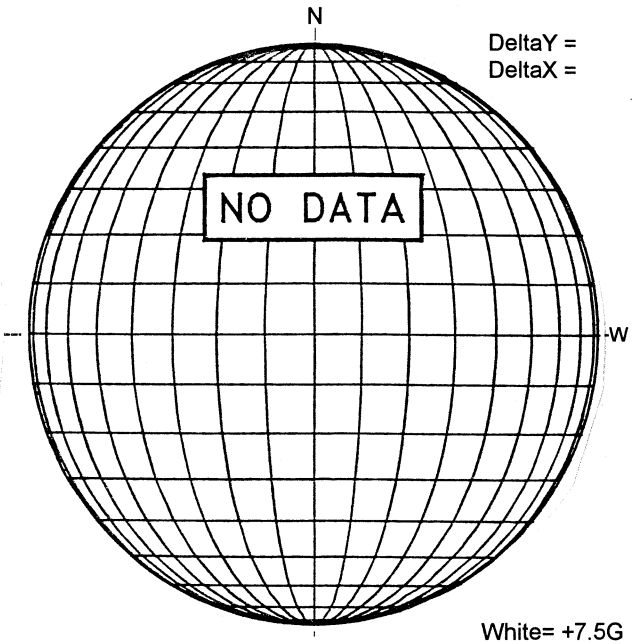

White= +7.5G
Black = -7.5G

KANZELHOHE H-ALPHA

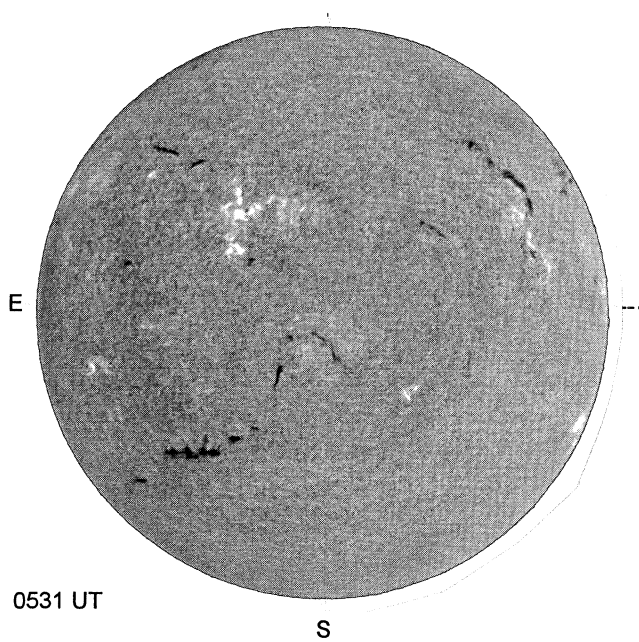

0531 UT

HOLLOMAN SUNSPOT

HOLLOMAN SUNSPOTS
May 13, 2003
14:00 UT Good
Bp = -2.8
Po = -21.4
Lo = 354.6

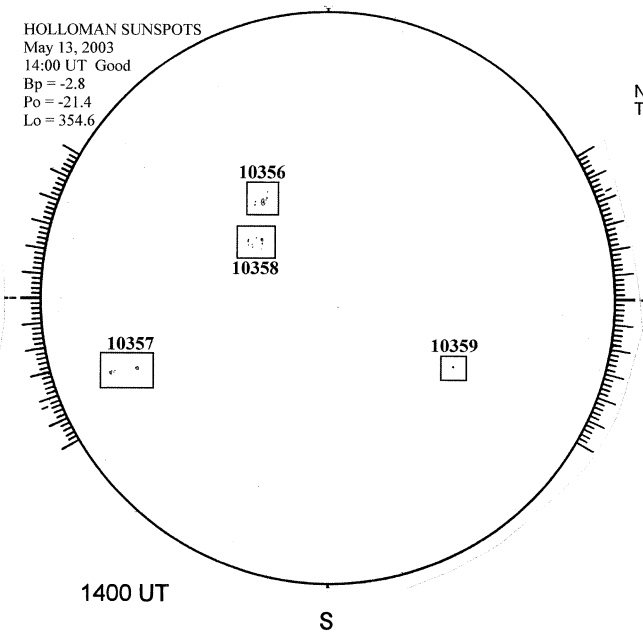

1400 UT

SACRAMENTO PEAK CORONA (1.15 Radii)

NSO / SACRAMENTO PEAK CORONAL DATA
TICK MARKS EVERY 10 MILLIONTHS

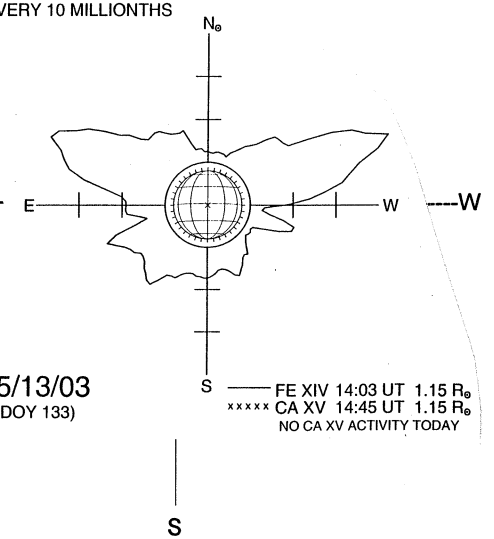

05/13/03
(DOY 133)

FE XIV 14:03 UT 1.15 R⊙
xxxxx CA XV 14:45 UT 1.15 R⊙
NO CA XV ACTIVITY TODAY