MAY 12, 2003 (P= -21.88 Bo = -3.05 Lo = 15.07)

KITT PEAK MAGNETOGRAM

N **868.8 nm**

Bright = +
Dark = -

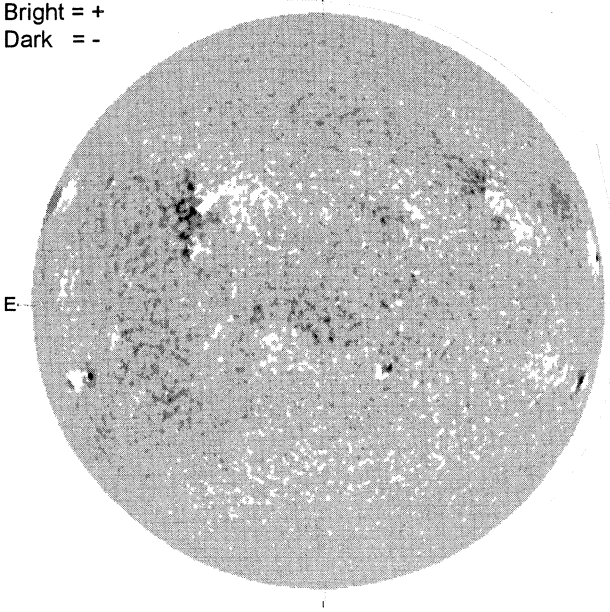

E

1628 UT

STANFORD MAGNETOGRAM

N

Solid = +
Dashed = -

2138 UT

MT. WILSON MAGNETOGRAM

N

DeltaY =
DeltaX =

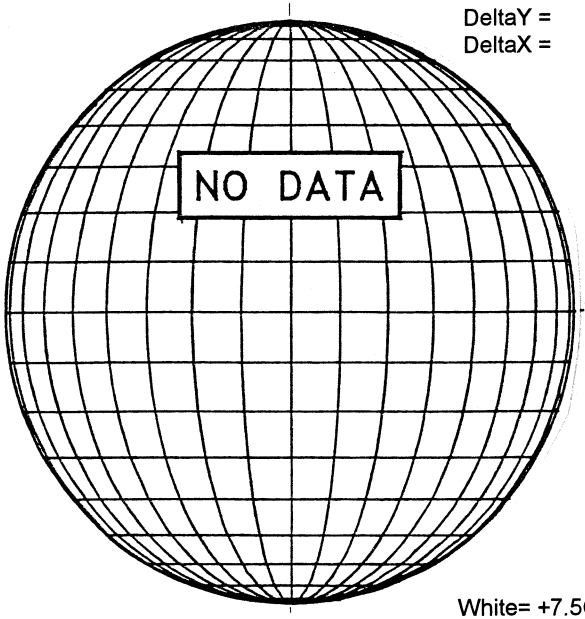

W

White= +7.5G
Black = -7.5G

KANZELHOHE H-ALPHA

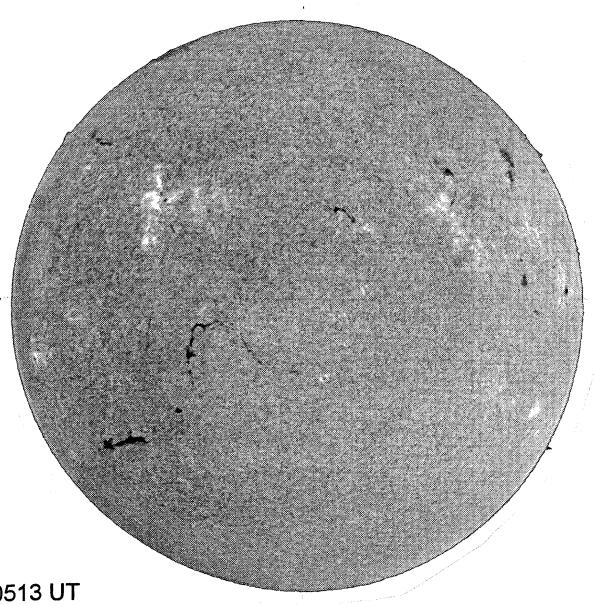

E

0513 UT

S

HOLLOMAN SUNSPOTS

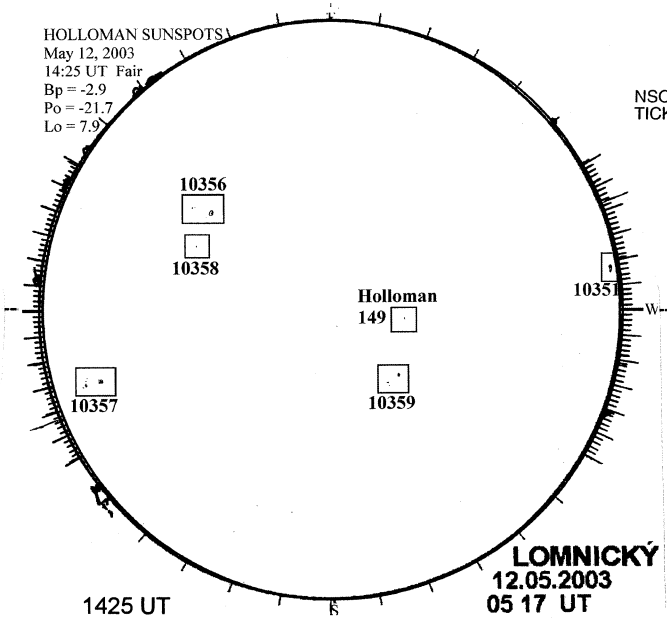

1425 UT
0517 UT LOMN Prom S

SACRAMENTO PEAK CORONA (1.15 Radii)

NSO / SACRAMENTO PEAK CORONAL DATA
TICK MARKS EVERY 10 MILLIONTHS

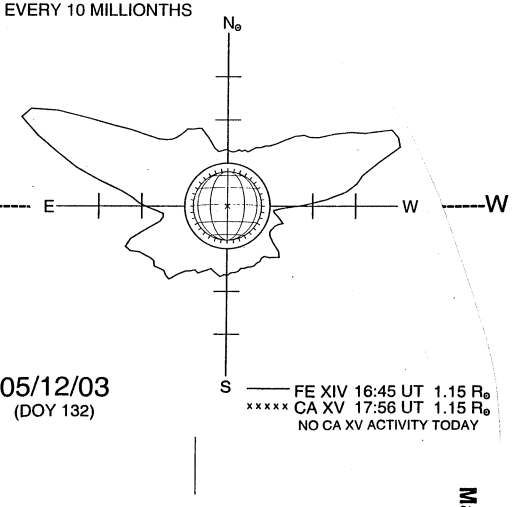

05/12/03
(DOY 132)

S