MAY 9, 2003 (P= -22.60, Bo = -3.38, Lo = 54.74)

KITT PEAK MAGNETOGRAM

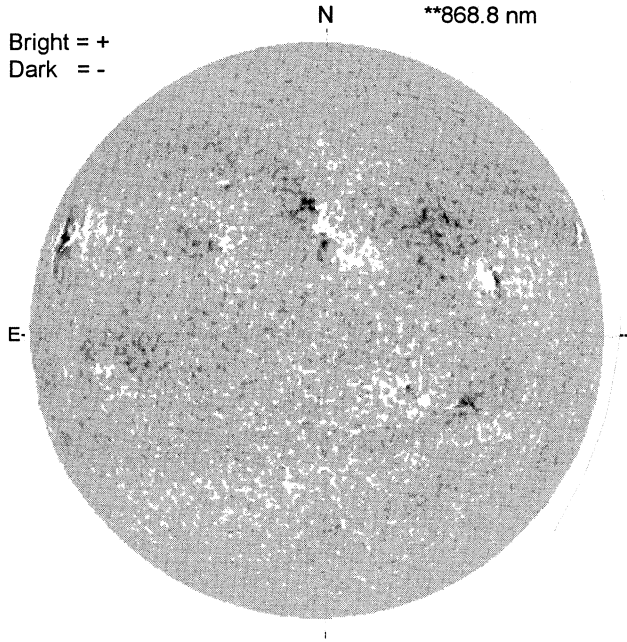

STANFORD MAGNETOGRAM

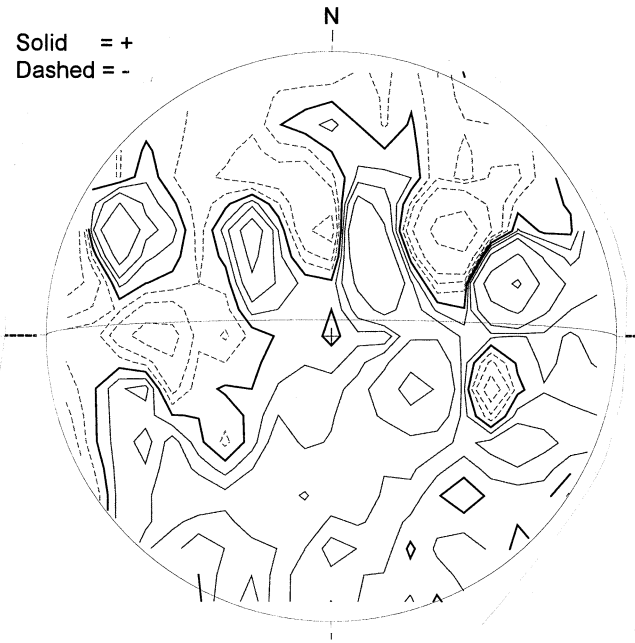

MT. WILSON MAGNETOGRAM

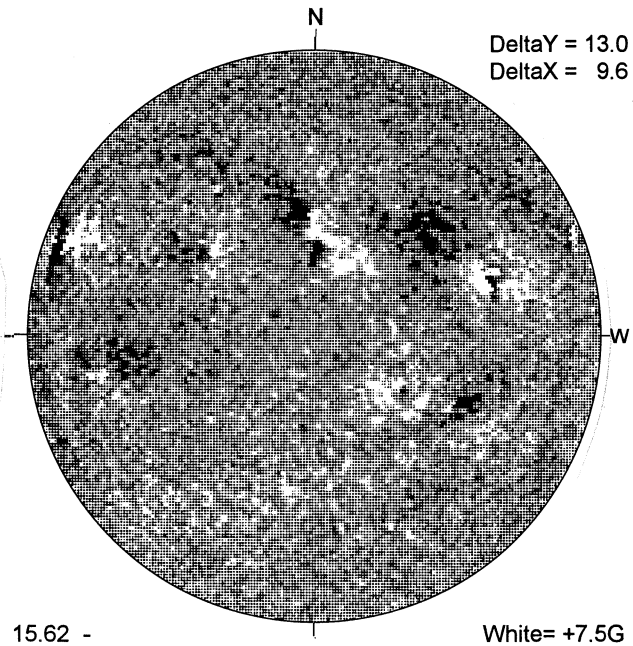

BIG BEAR H-ALPHA

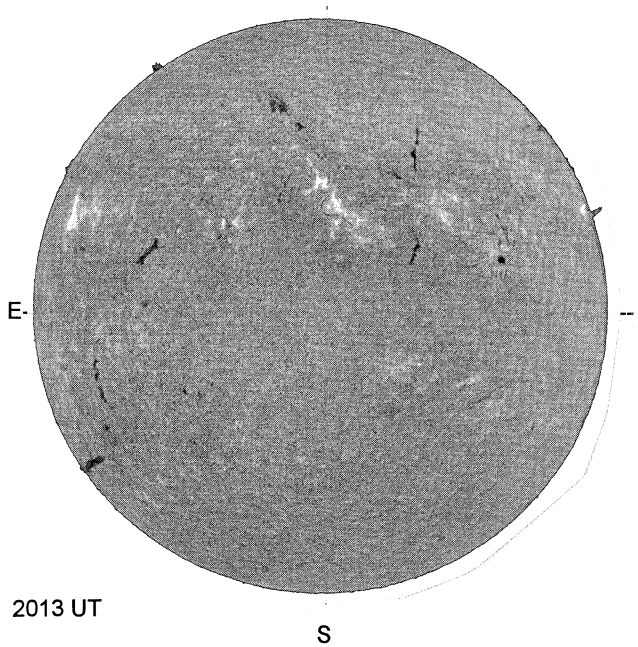

HOLLOMAN SUNSPOT

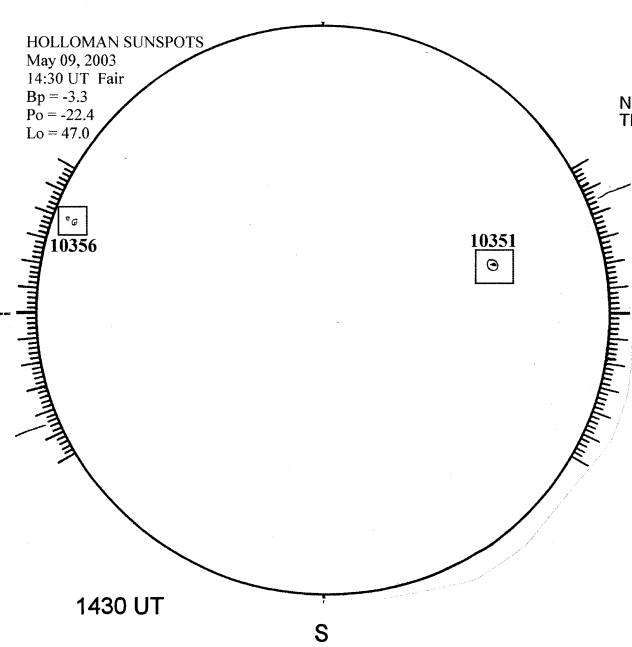
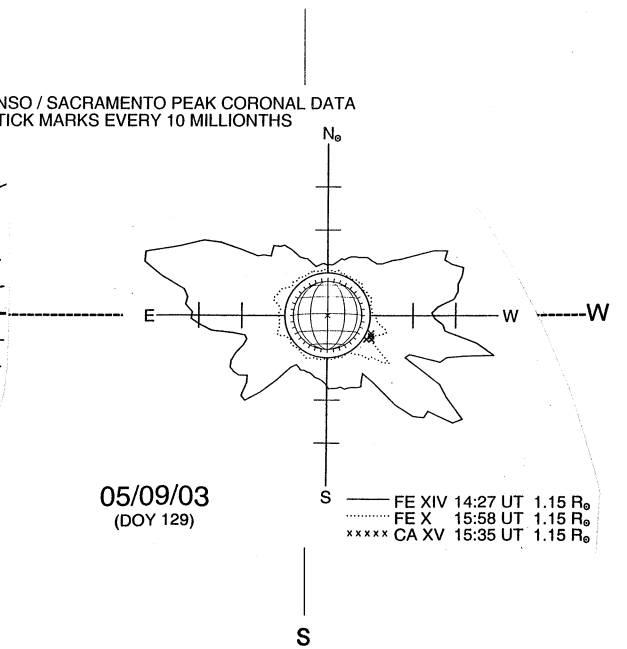
SACRAMENTO PEAK CORONA (1.15 Radii)