# MAY 5, 2003 ( P= -23.47, Bo = -3.80, Lo = 107.62)

## KITT PEAK MAGNETOGRAM

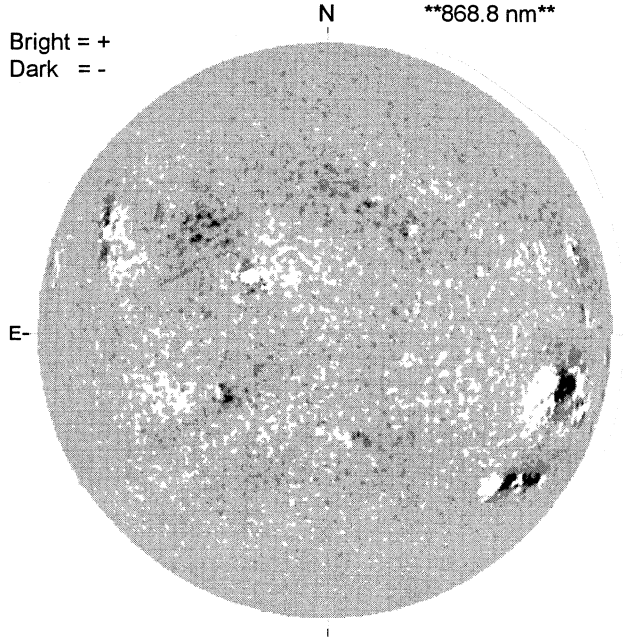


## STANFORD MAGNETOGRAM

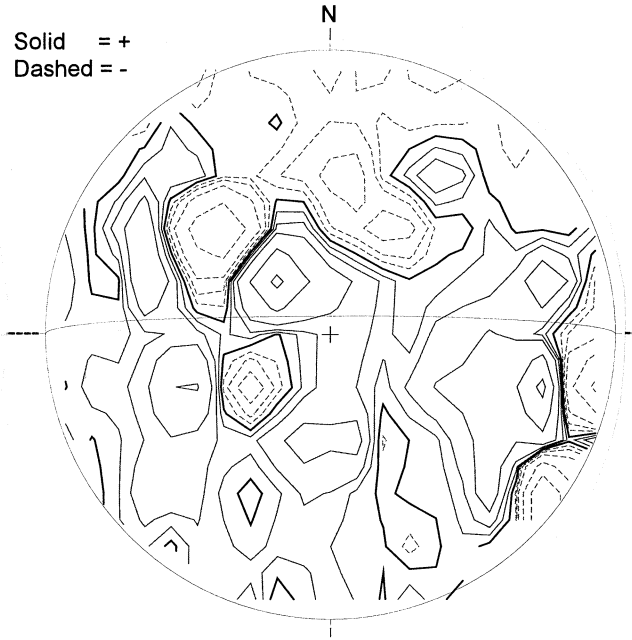


## MT. WILSON MAGNETOGRAM

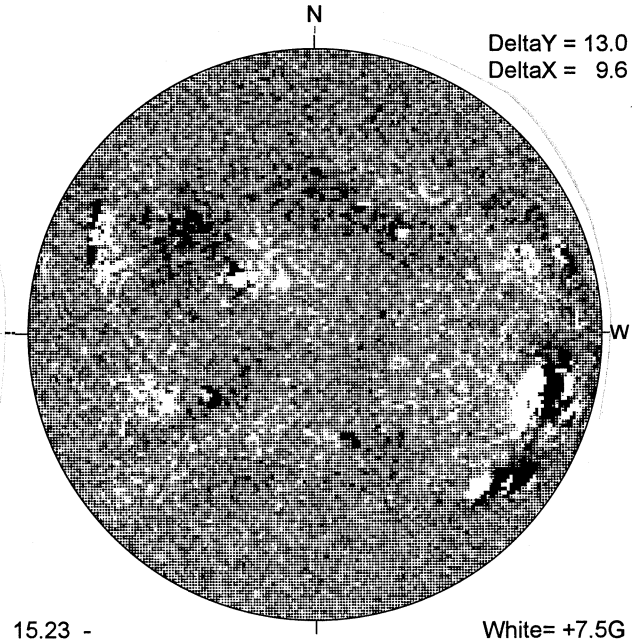


## BIG BEAR H-ALPHA

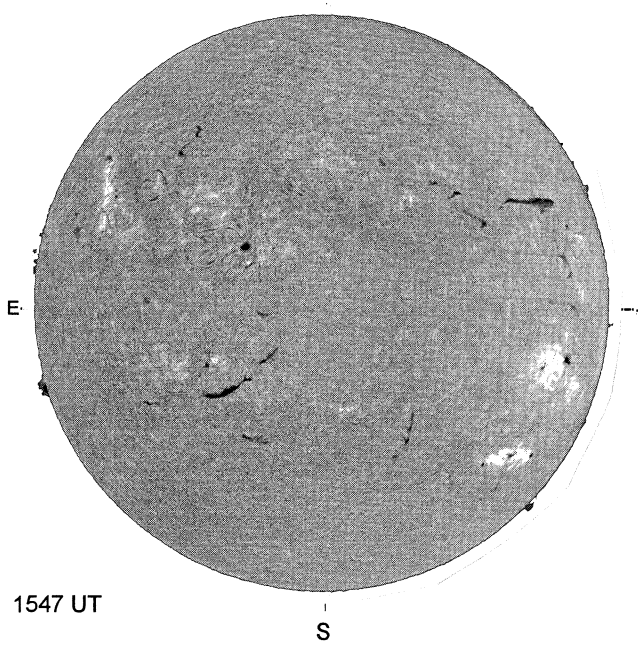


## HOLLOMAN SUNSPOT

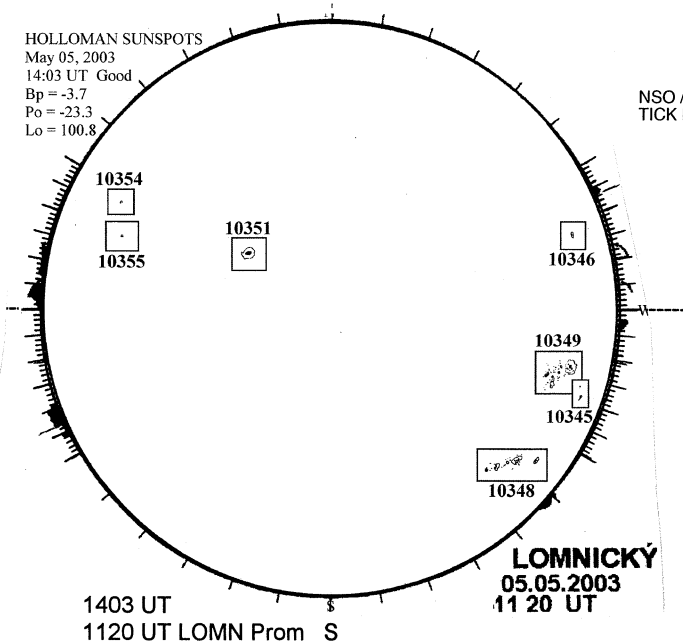

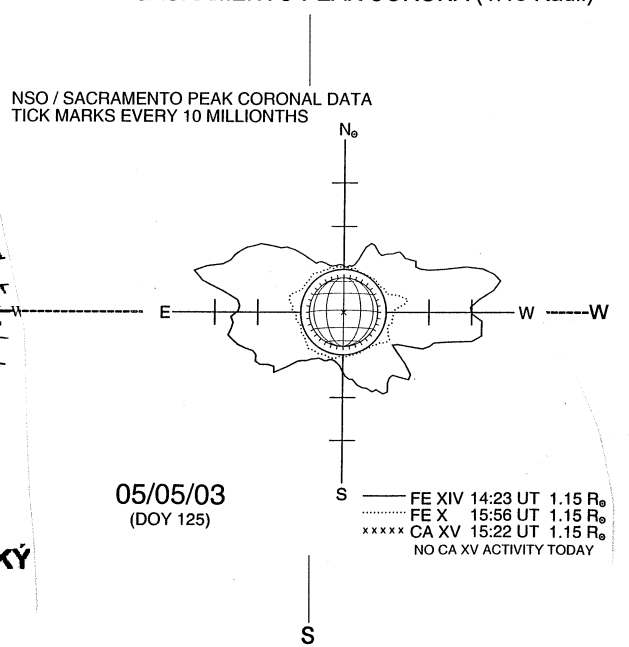
## SACRAMENTO PEAK CORONA (1.15 Radii)