MAY 2, 2003 (P= -24.05, Bo = -4.11, Lo = 147.27)

KITT PEAK MAGNETOGRAM

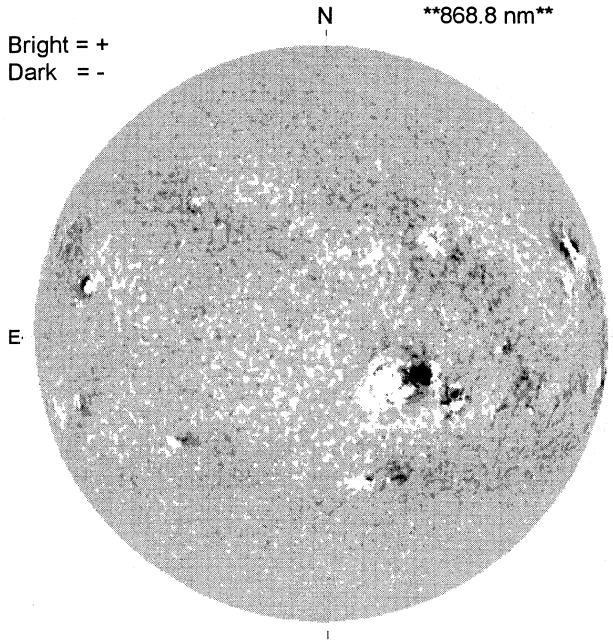

STANFORD MAGNETOGRAM

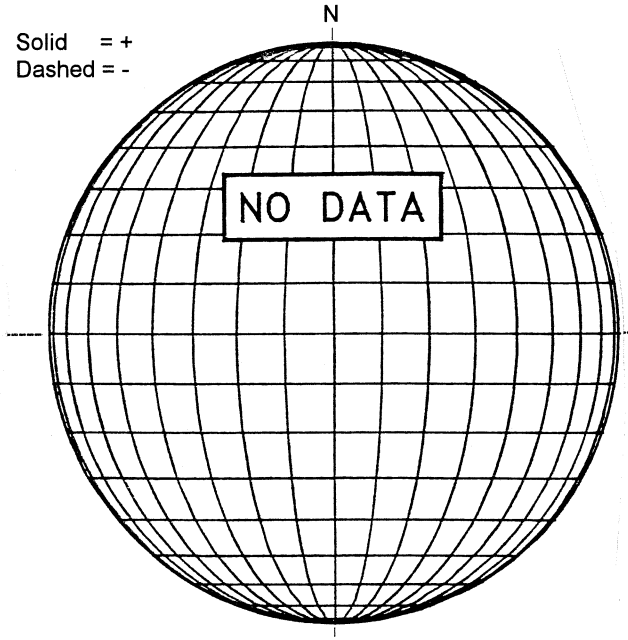

MT. WILSON MAGNETOGRAM

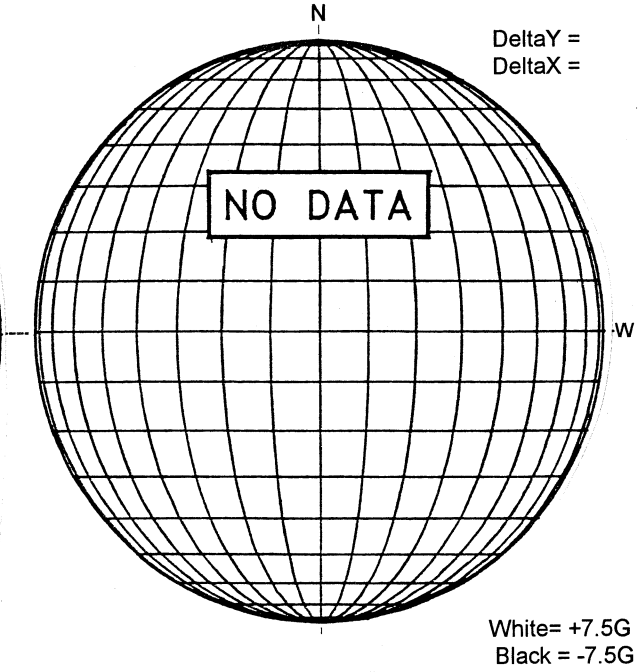

KANZELHOHE H-ALPHA

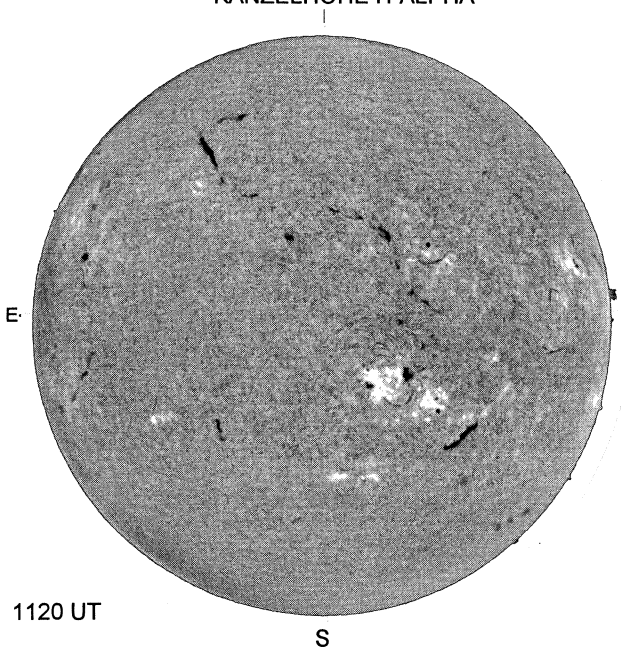

HOLLOMAN SUNSPOT

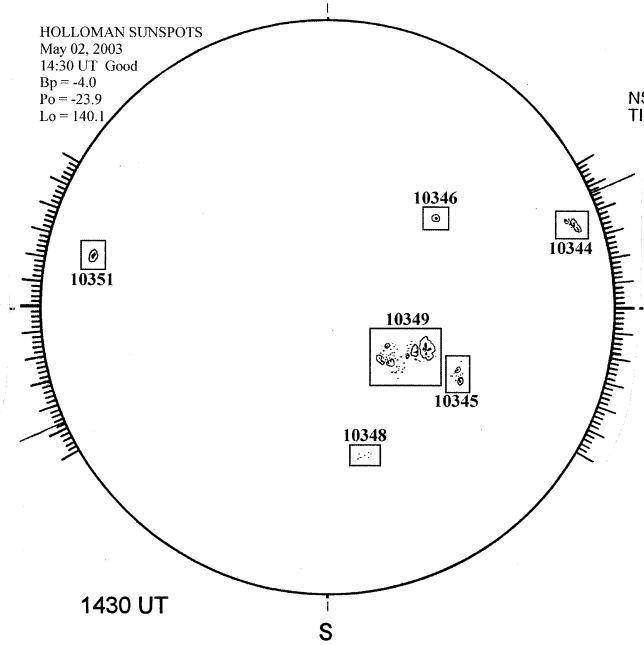
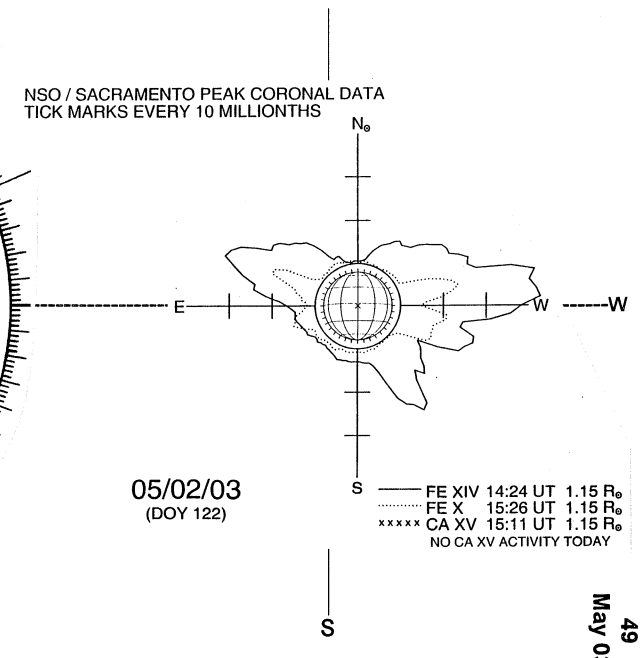
SACRAMENTO PEAK CORONA (1.15 Radii)----