MAY 1, 2003 (P= -24.22, Bo = -4.21, Lo = 160.49)

KITT PEAK MAGNETOGRAM

N **868.8 nm**

Bright = +
Dark = -

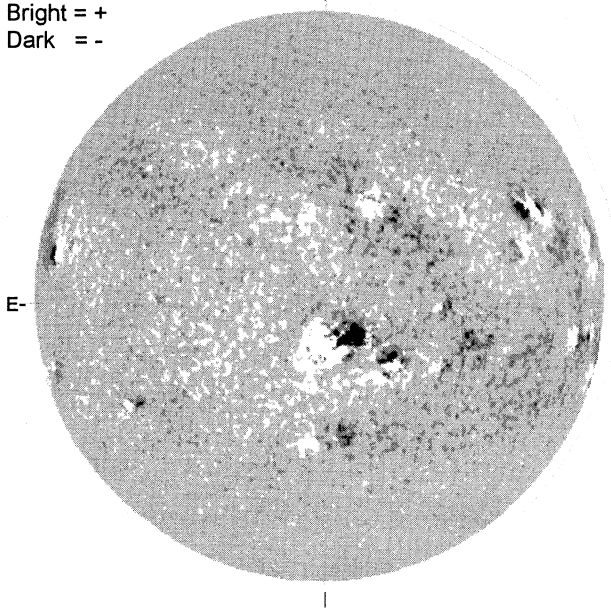

E-

1559 UT

STANFORD MAGNETOGRAM

N

Solid = +
Dashed = -

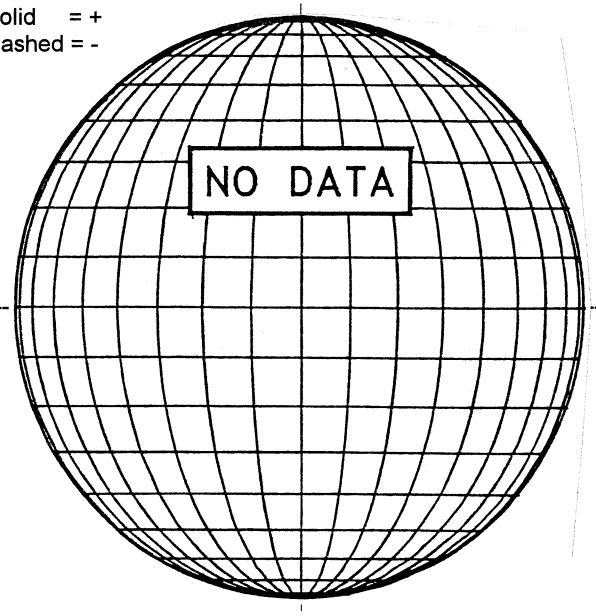

23.94 -
24.35 UT

MT. WILSON MAGNETOGRAM

N

DeltaY = 20.1
DeltaX = 13.0

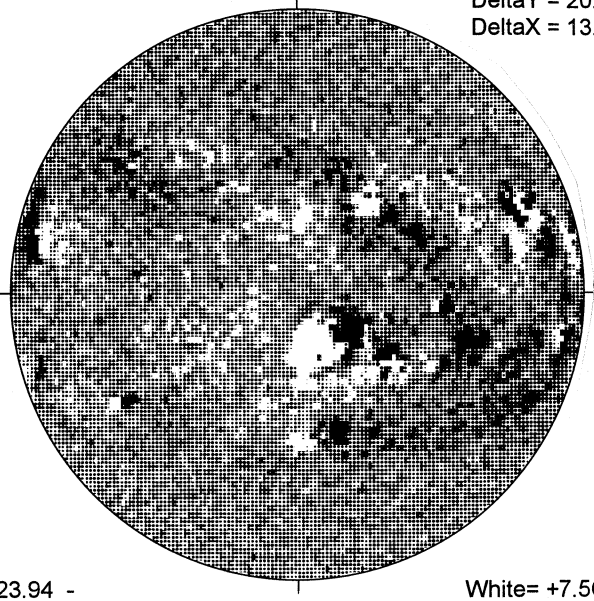

W

White= +7.5G
Black = -7.5G

BIG BEAR H-ALPHA

E-

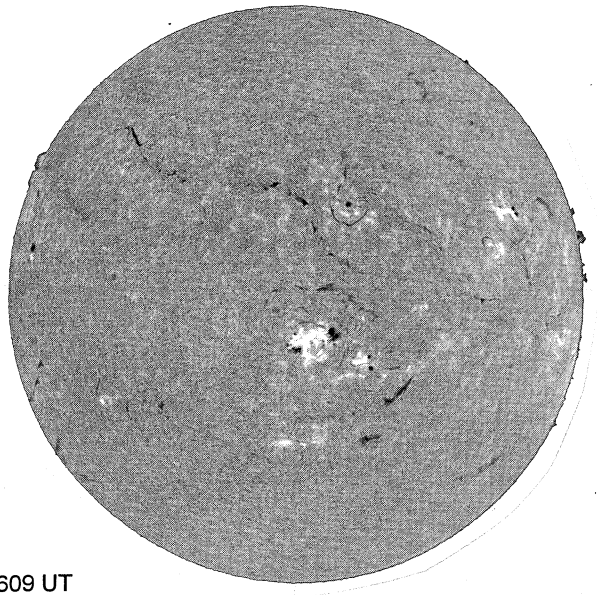

1609 UT

S

HOLLOMAN SUNSPOT

HOLLOMAN SUNSPOTS
May 01, 2003
14:30 UT Fair
Bp = -4.1
Po = -24.1
Lo = 153.8

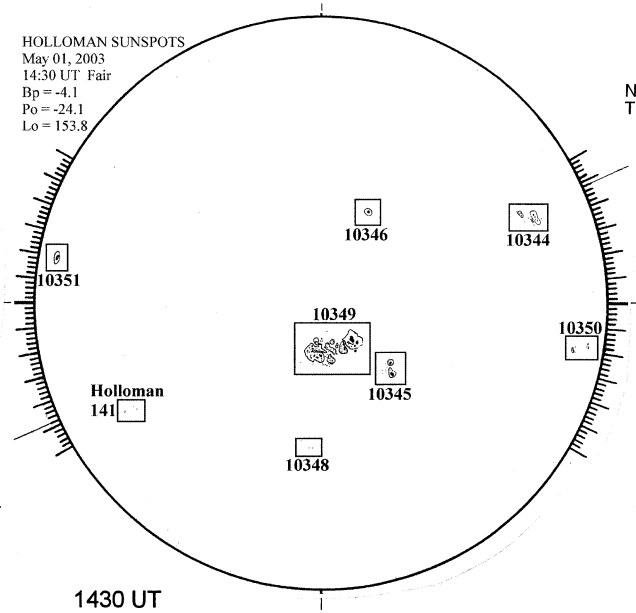

1430 UT

S

SACRAMENTO PEAK CORONA (1.15 Radii)

NSO / SACRAMENTO PEAK CORONAL DATA
TICK MARKS EVERY 10 MILLIONTHS

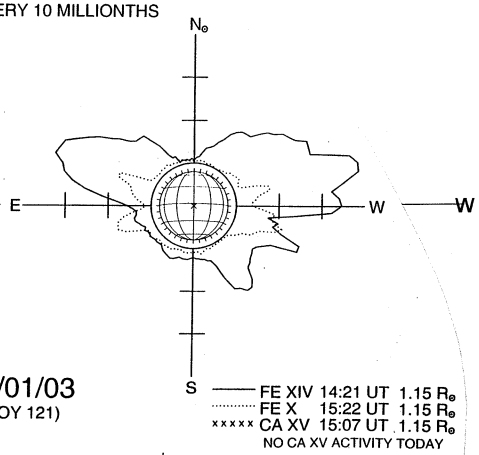

05/01/03
(DOY 121)

FE XIV 14:21 UT 1.15 $R_\odot$
FE X 15:22 UT 1.15 $R_\odot$
xxxxx CA XV 15:07 UT 1.15 $R_\odot$
NO CA XV ACTIVITY TODAY

S