APRIL 28, 2003 (P= -24.71, Bo = -4.51, Lo = 200.13)

KITT PEAK MAGNETOGRAM

N **868.8 nm**

Bright = +
Dark = -

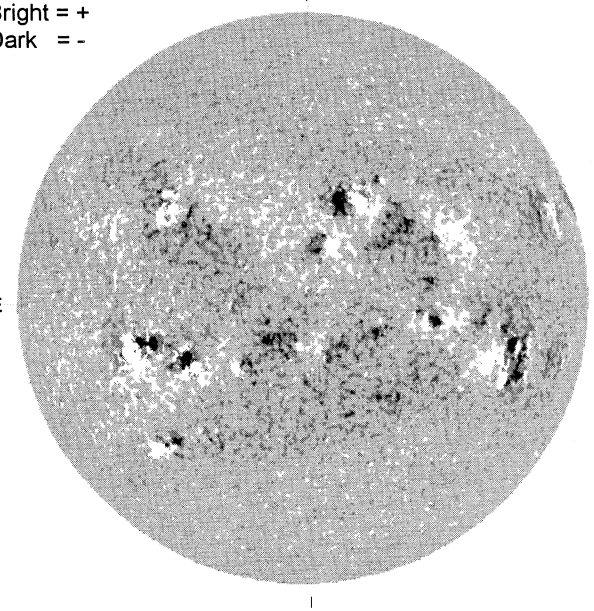

E

1527 UT

STANFORD MAGNETOGRAM

N

Solid = +
Dashed = -

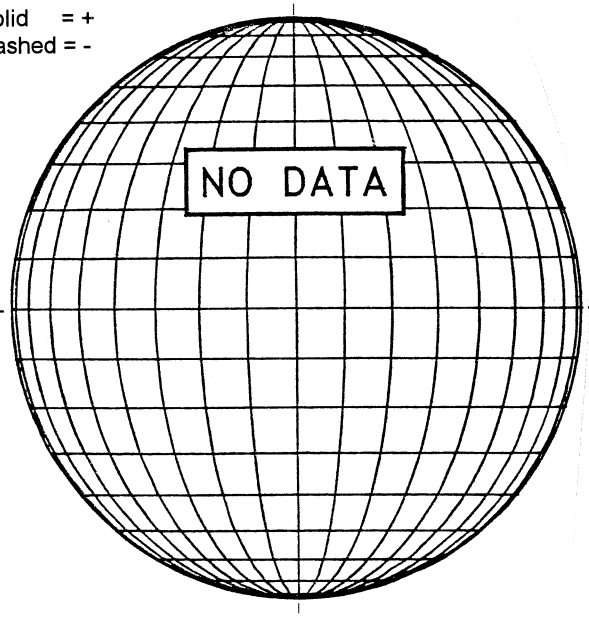

MT. WILSON MAGNETOGRAM

N

DeltaY =
DeltaX =

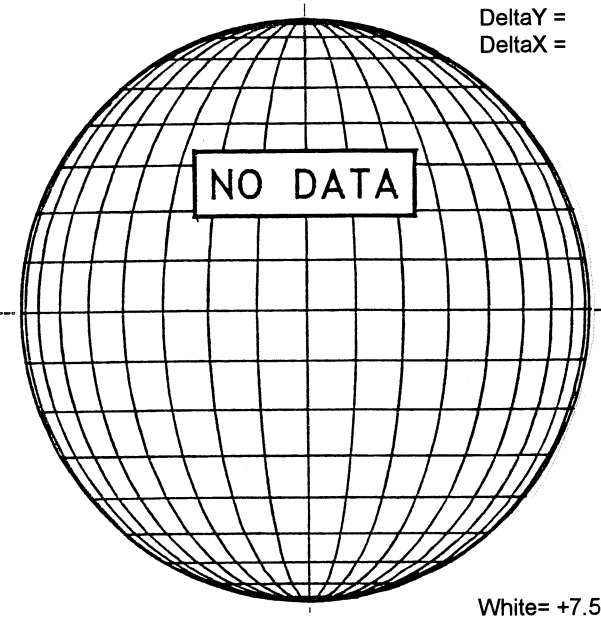

W

White= +7.5G
Black = -7.5G

BIG BEAR H-ALPHA

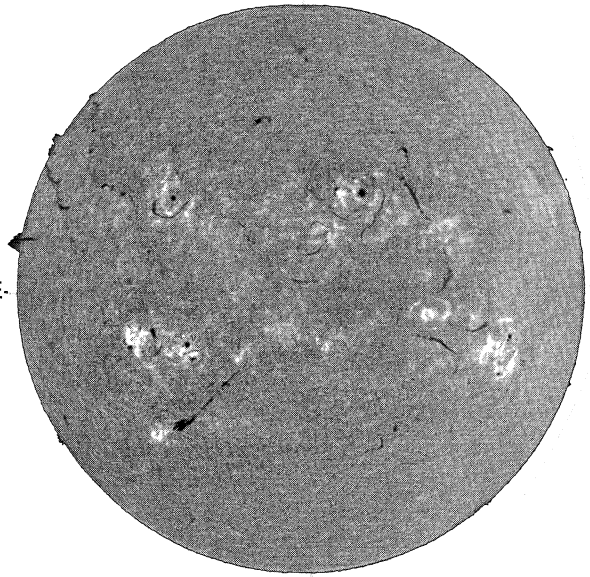

E-

1626 UT

S

RAMEY SUNSPOT

RAMEY SUNSPOTS
April 28, 2003
11:45 UT Fair
Bp = -4.4
Po = -24.6
Lo = 193.6

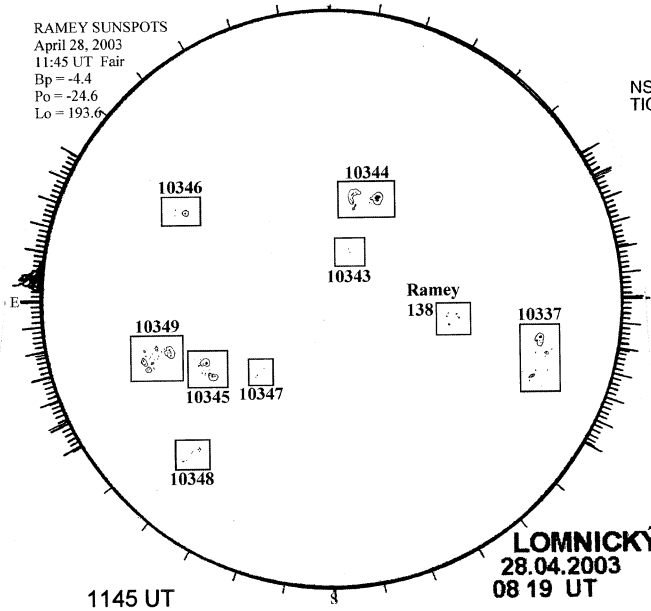

LOMNICKÝ
28.04.2003
08 19 UT

1145 UT
0819 UT LOMN Prom S

SACRAMENTO PEAK CORONA (1.15 Radii)----

NSO / SACRAMENTO PEAK CORONAL DATA
TICK MARKS EVERY 10 MILLIONTHS

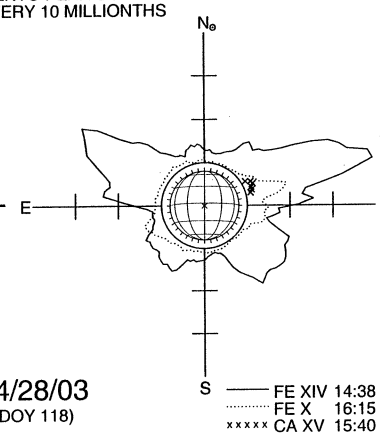

W

04/28/03
(DOY 118)

FE XIV 14:38 UT 1.15 R☉
FE X 16:15 UT 1.15 R☉
xxxxx CA XV 15:40 UT 1.15 R☉

S

73
Apr 03