MARCH 26, 2003 (P= -25.75, Bo = -6.85, Lo = 275.76)

KITT PEAK MAGNETOGRAM

N

868.8 nm

Bright = +
Dark = -

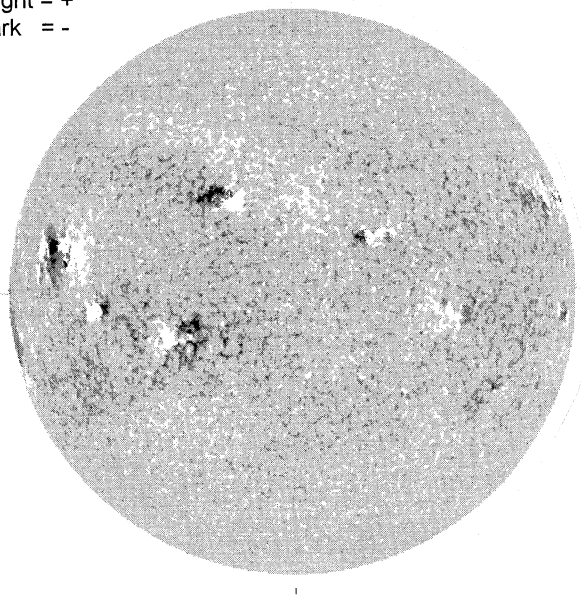

E-

1455 UT

STANFORD MAGNETOGRAM

N

Solid = +
Dashed = -

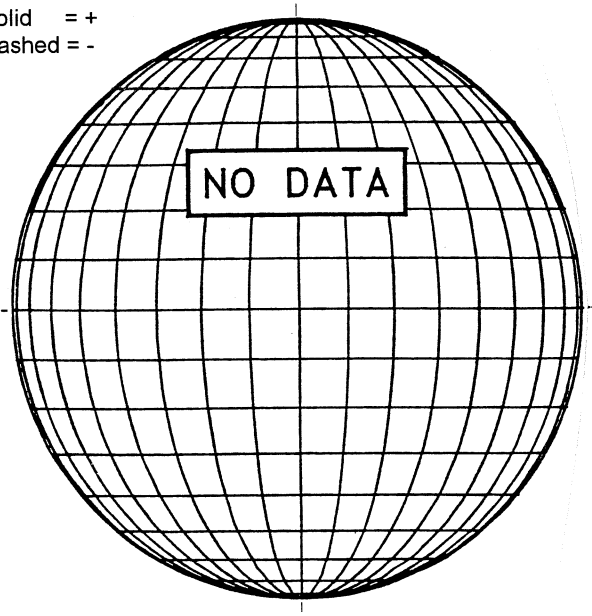

MT. WILSON MAGNETOGRAM

N

DeltaY = 13.1
DeltaX = 9.6

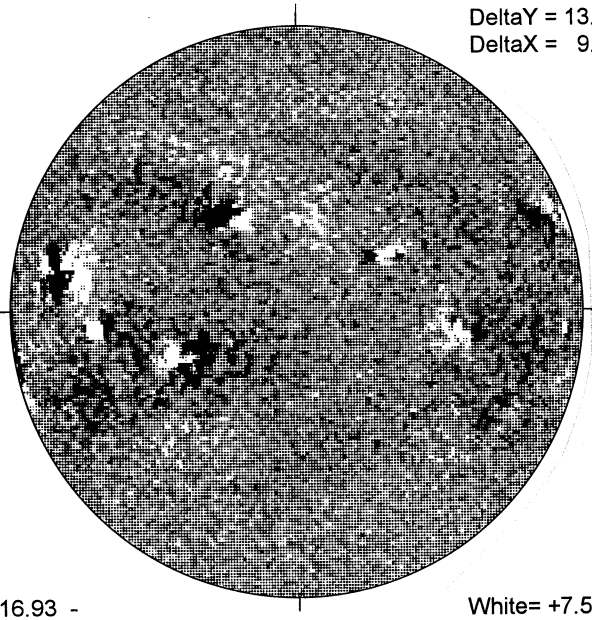

W

16.93 -
17.89 UT

White= +7.5G
Black = -7.5G

BIG BEAR H-ALPHA

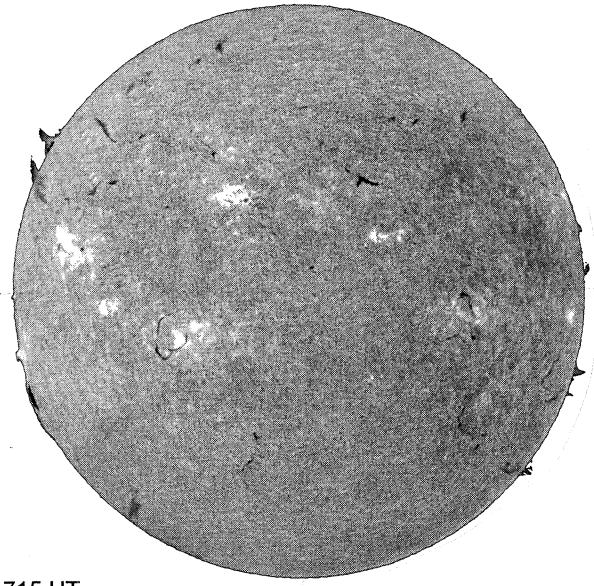

E-

1715 UT

S

RAMEY SUNSPOT

RAMEY SUNSPOTS
March 26, 2003
12:00 UT Fair
Bp = -6.8
Po = -25.7
Lo = 269.6

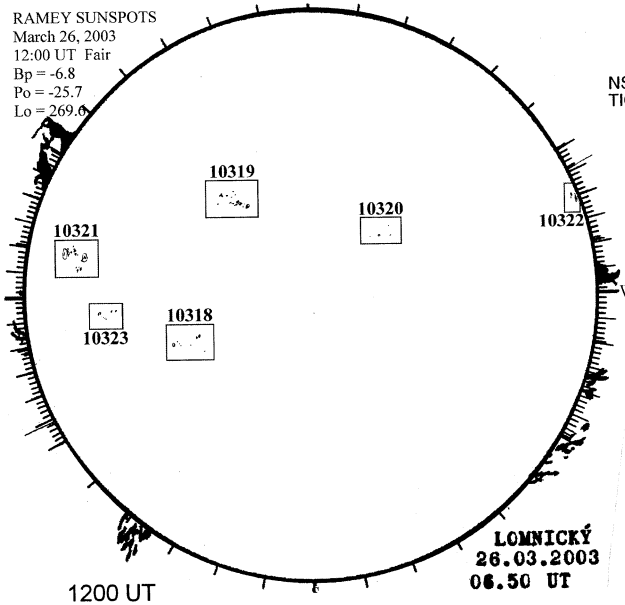

1200 UT
0650 UT LOMN Prom S

SACRAMENTO PEAK CORONA (1.15 Radii)

NSO / SACRAMENTO PEAK CORONAL DATA
TICK MARKS EVERY 20 MILLIONTHS

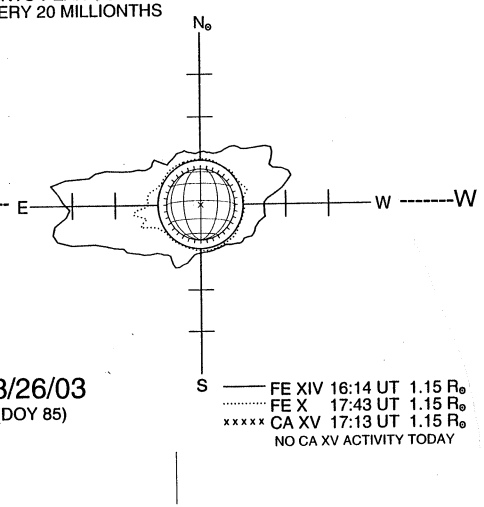

03/26/03
(DOY 85)

FE XIV 16:14 UT 1.15 R☉
FE X 17:43 UT 1.15 R☉
CA XV 17:13 UT 1.15 R☉
NO CA XV ACTIVITY TODAY