MARCH 24, 2003 (P= -25.56, Bo = -6.93, Lo = 302.13)

KITT PEAK MAGNETOGRAM

868.8 nm

Bright = +
Dark = -

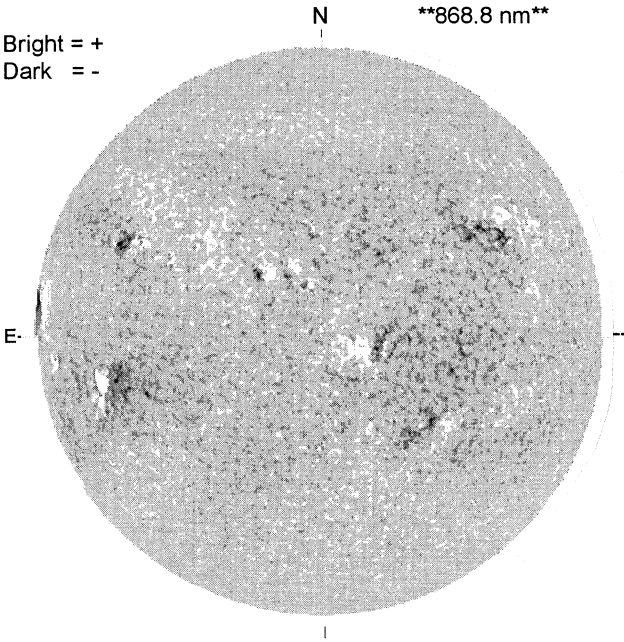

1552 UT

STANFORD MAGNETOGRAM

Solid = +
Dashed = -

2149 UT

MT. WILSON MAGNETOGRAM

DeltaY = 13.1
DeltaX = 9.6

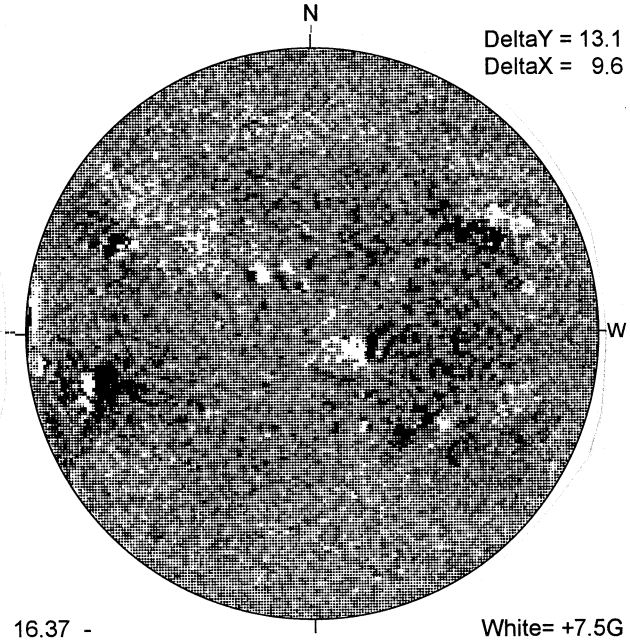

16.37 -
17.33 UT

White= +7.5G
Black = -7.5G

BIG BEAR H-ALPHA

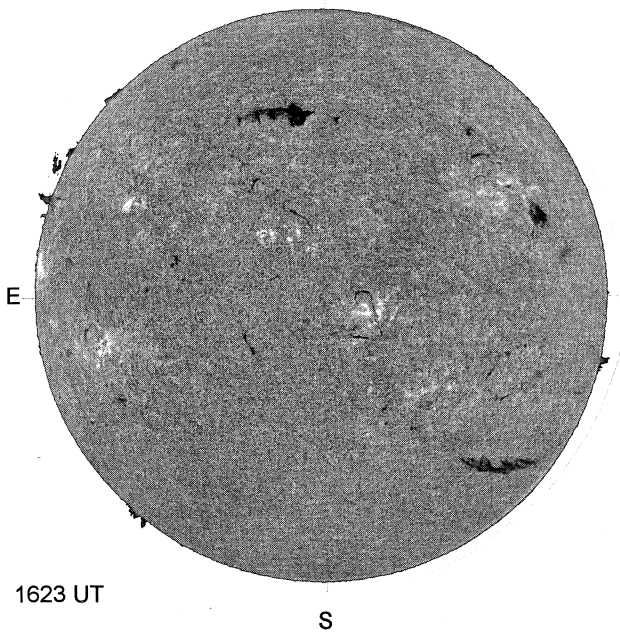

1623 UT

RAMEY SUNSPOT

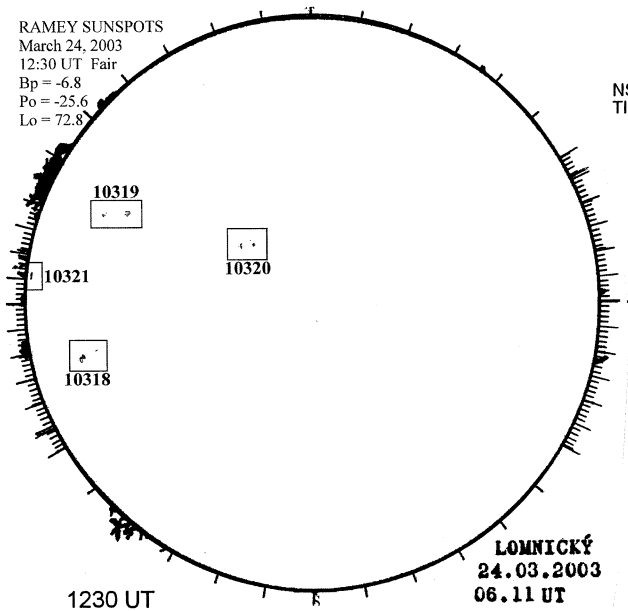

1230 UT
0611 UT LOMN Prom S

SACRAMENTO PEAK CORONA (1.15 Radii)

NSO / SACRAMENTO PEAK CORONAL DATA
TICK MARKS EVERY 20 MILLIONTHS

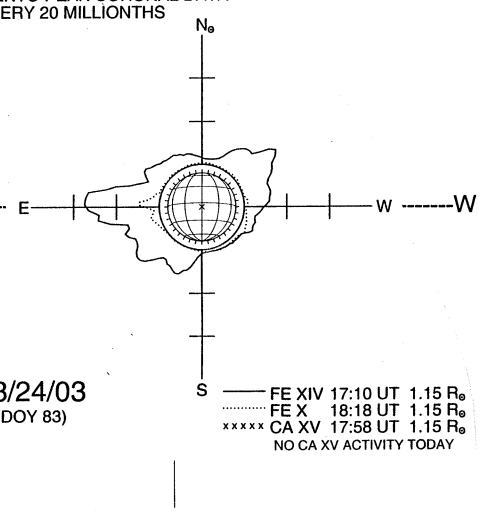

03/24/03
(DOY 83)

FE XIV 17:10 UT 1.15 $R_\odot$
FE X 18:18 UT 1.15 $R_\odot$
xxxxx CA XV 17:58 UT 1.15 $R_\odot$
NO CA XV ACTIVITY TODAY