FEBRUARY 27, 2003 (P= -20.90, Bo = -7.18, Lo = 271.58)

KITT PEAK MAGNETOGRAM

Bright = +
Dark = -

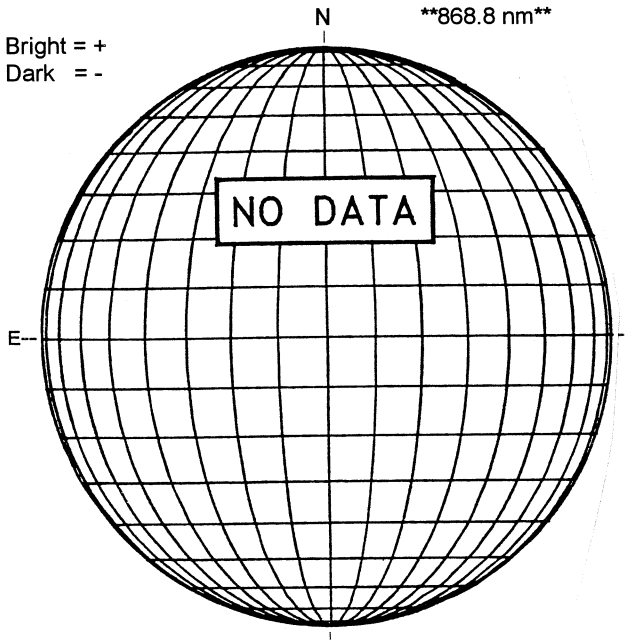

STANFORD MAGNETOGRAM

Solid = +
Dashed = -

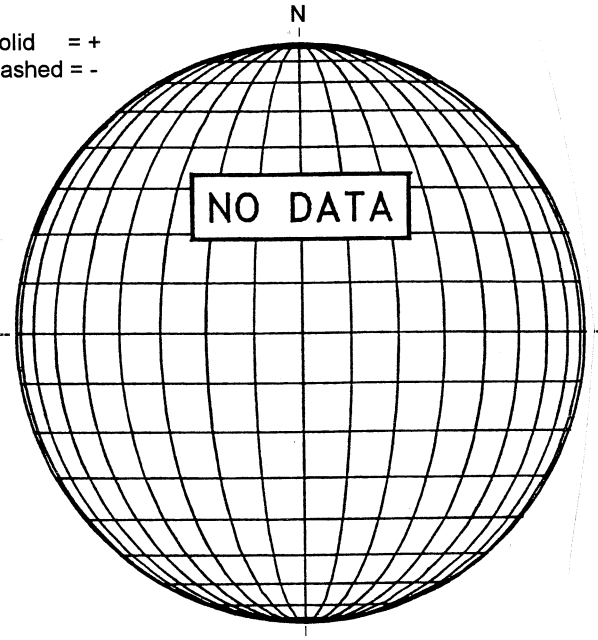

MT. WILSON MAGNETOGRAM

DeltaY =
DeltaX =

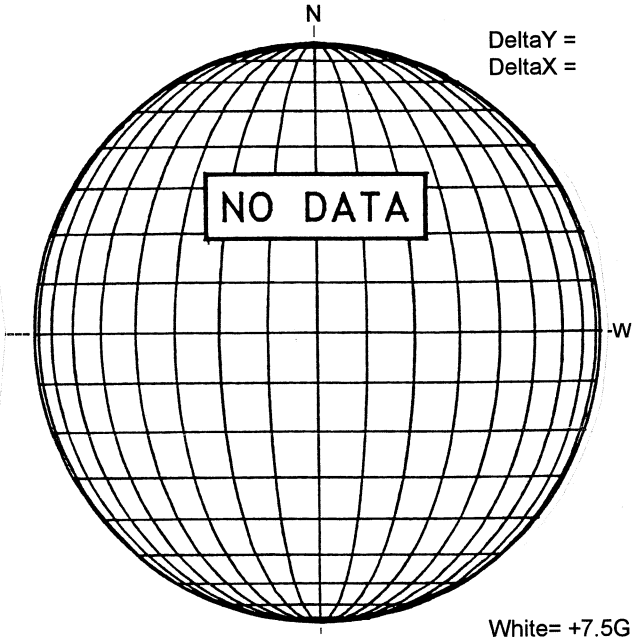

White= +7.5G
Black = -7.5G

KANZELHOHE H-ALPHA

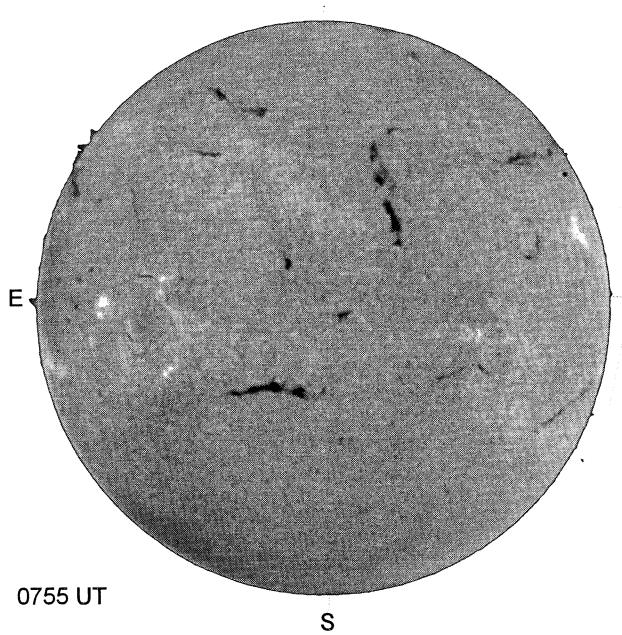

0755 UT

RAMEY SUNSPOT

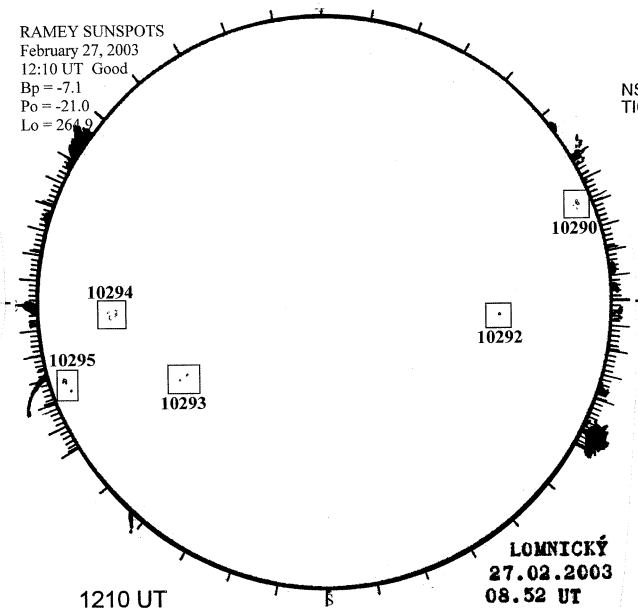

1210 UT
0852 UT LOMN Prom S

SACRAMENTO PEAK CORONA (1.15 Radii)----

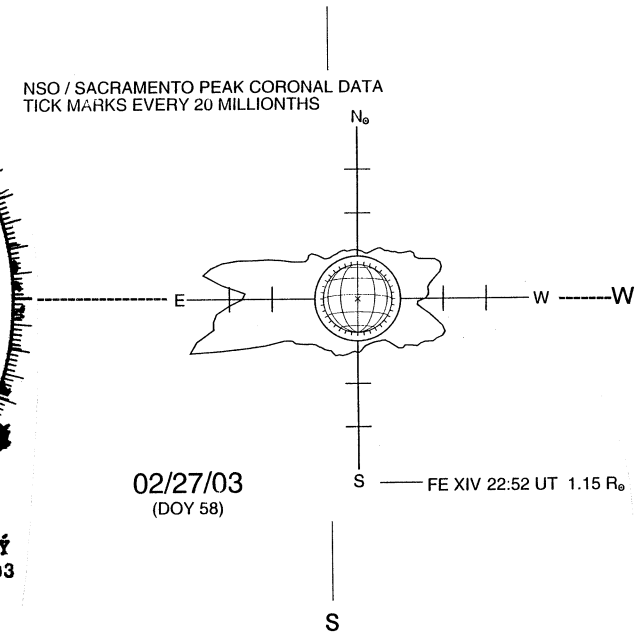

02/27/03
(DOY 58)