JANUARY 28, 2003 (P= -10.33, Bo = -5.70, Lo = 306.61)

KITT PEAK MAGNETOGRAM

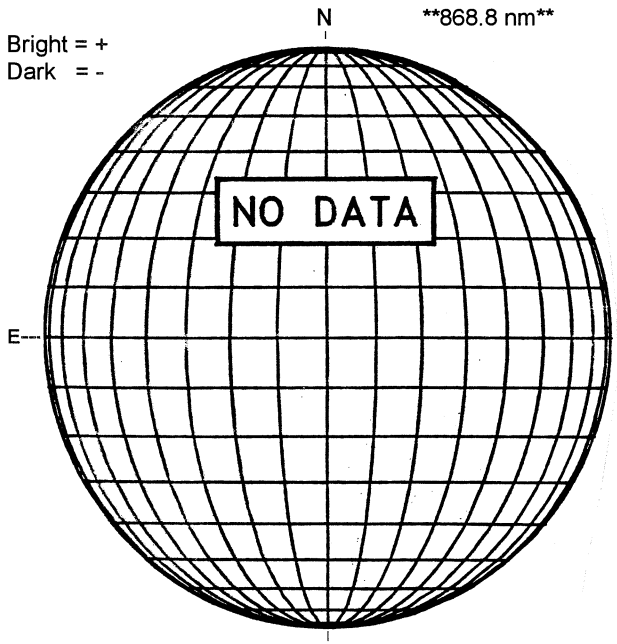

STANFORD MAGNETOGRAM

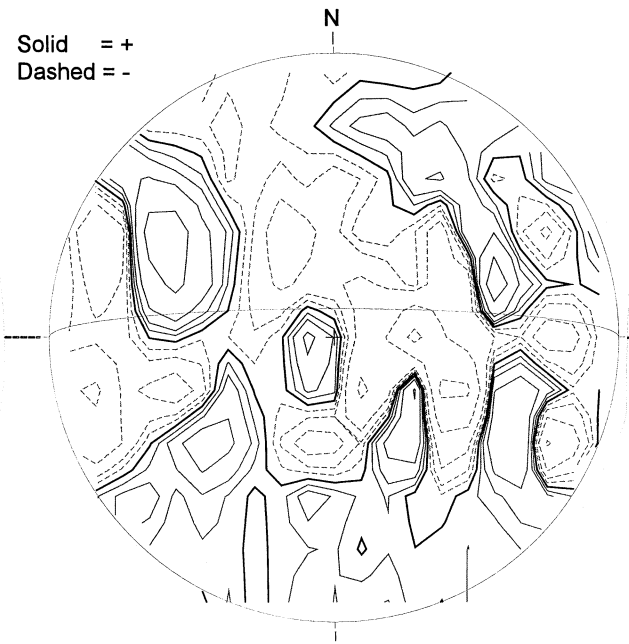

MT. WILSON MAGNETOGRAM

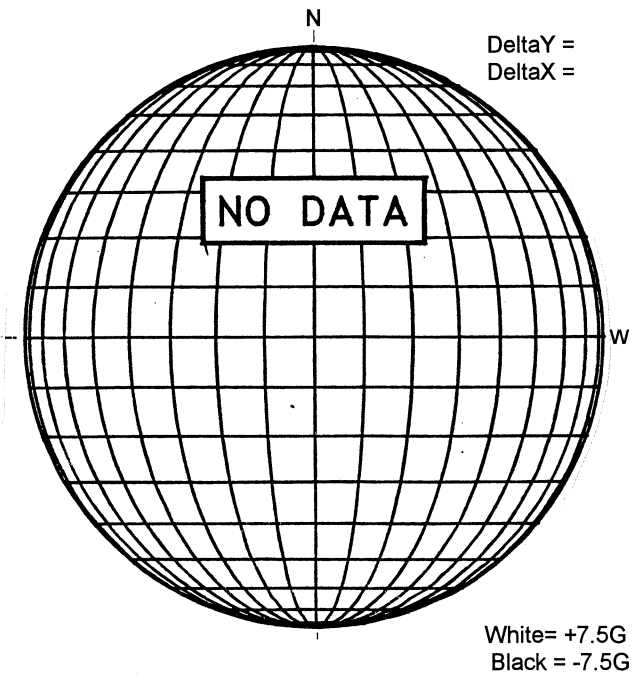

CATANIA H-ALPHA

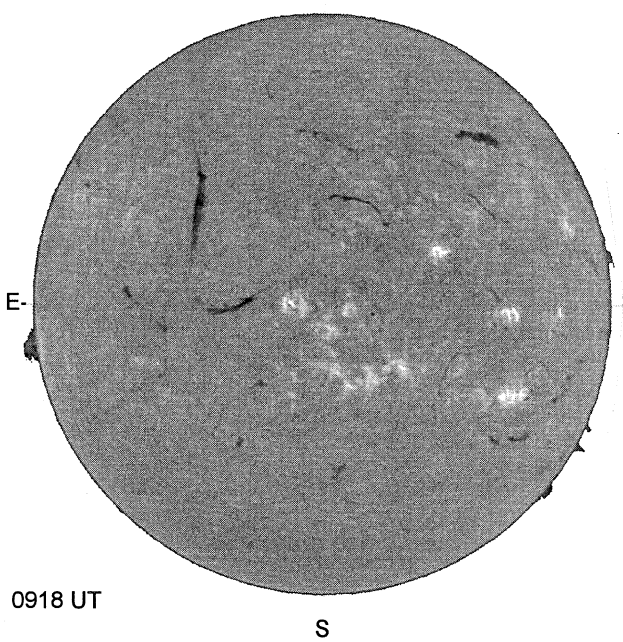

RAMEY SUNSPOT

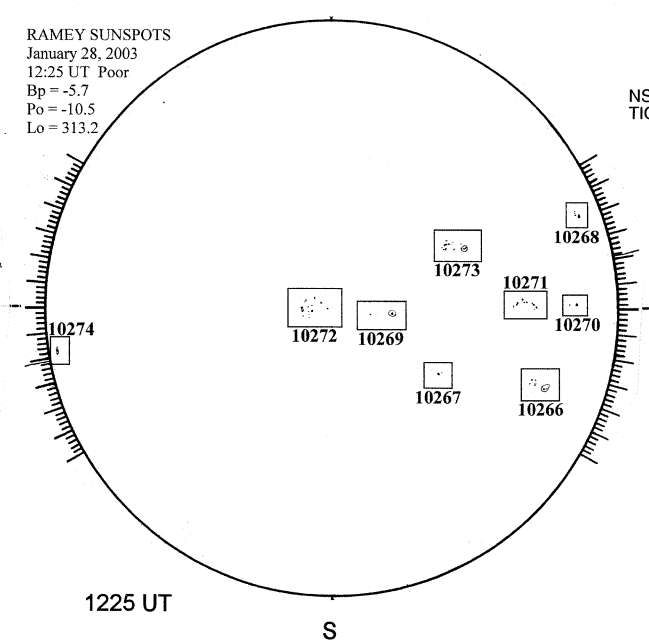

SACRAMENTO PEAK CORONA (1.15 Radii)----

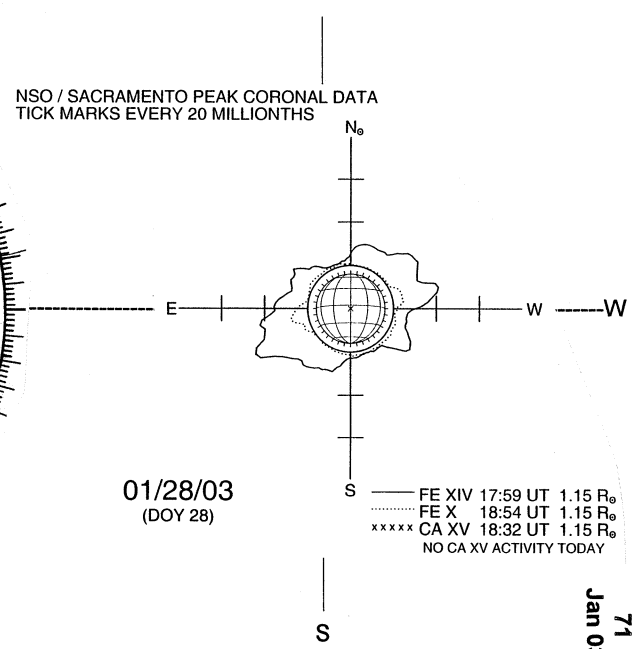

71
Jan 03