# JANUARY 21, 2003 ( P= -7.25, Bo = -5.10, Lo = 38.78)

## KITT PEAK MAGNETOGRAM

Bright = +
Dark = -

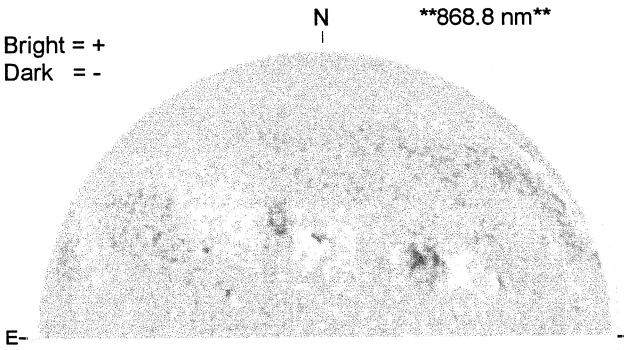


1646 UT

## STANFORD MAGNETOGRAM

Solid = +
Dashed = -

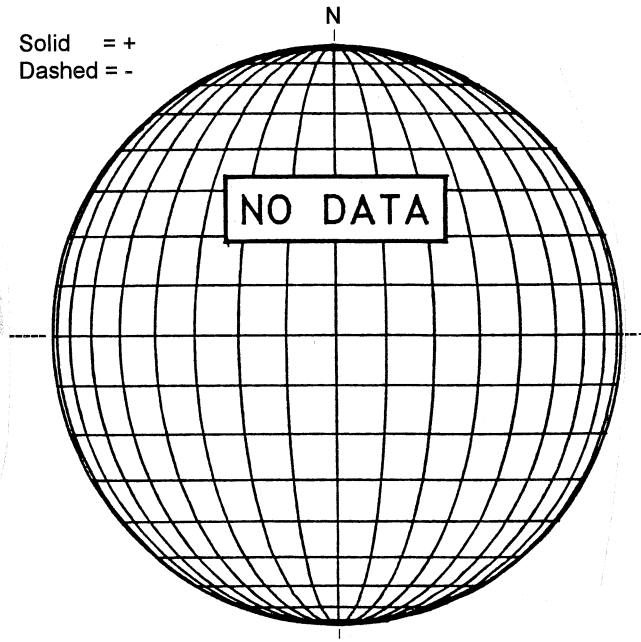


## MT. WILSON MAGNETOGRAM

DeltaY = 13.1
DeltaX = 9.6

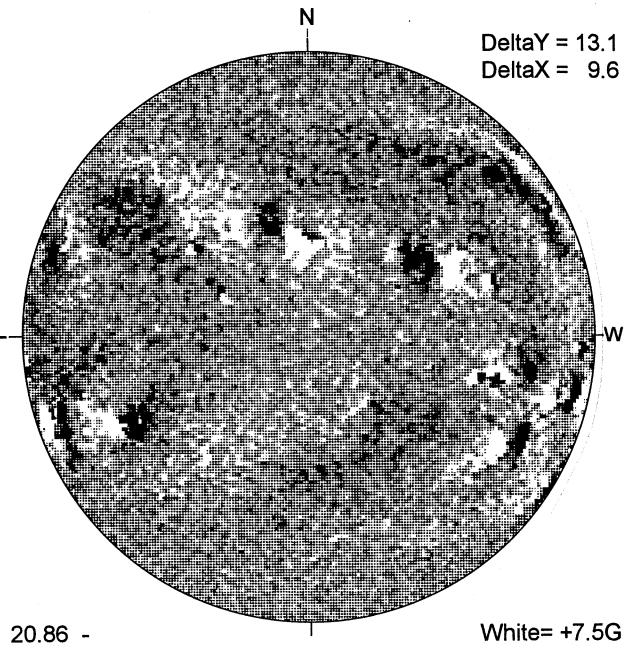


20.86 -
21.84 UT

White= +7.5G
Black = -7.5G

## BIG BEAR H-ALPHA

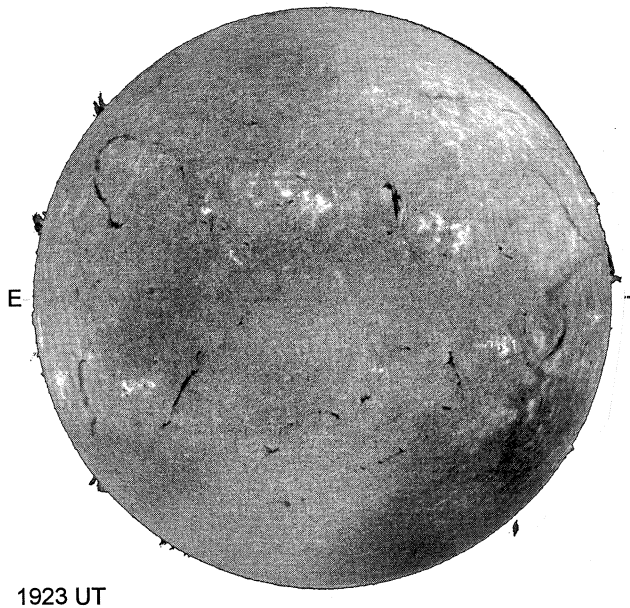


1923 UT

S

## RAMEY SUNSPOT

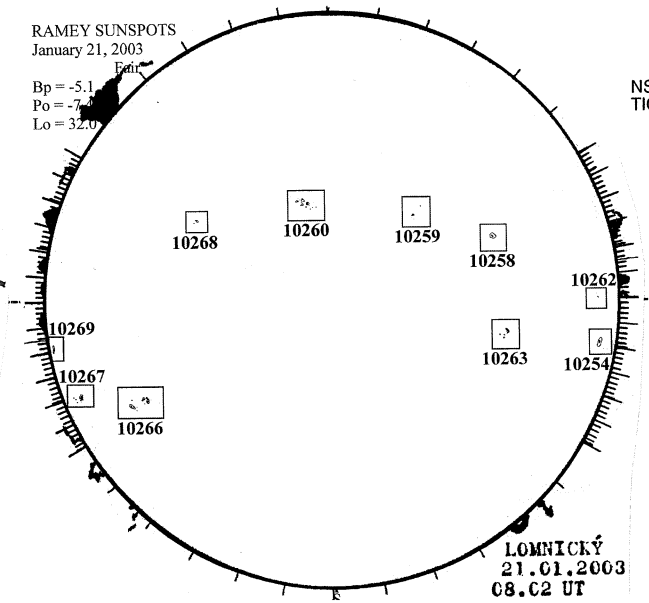


0802 UT LOMN Prom S

## SACRAMENTO PEAK CORONA (1.15 Radii)----

NSO / SACRAMENTO PEAK CORONAL DATA
TICK MARKS EVERY 20 MILLIONTHS

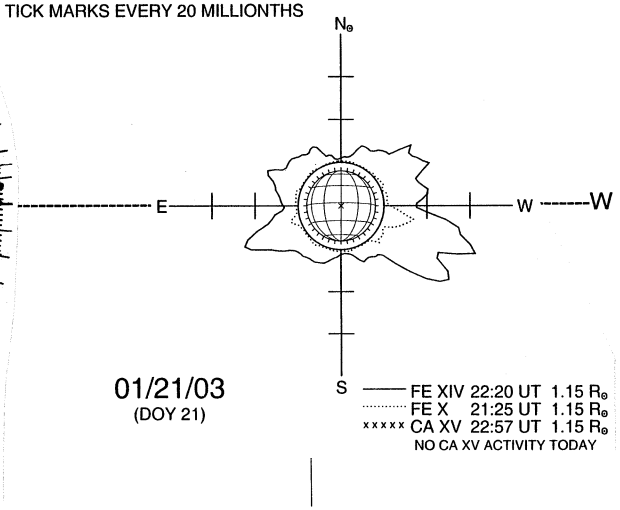


01/21/03
(DOY 21)

S