JANUARY 7, 2003 (P= -0.66, Bo = -3.67, Lo = 223.13)

KITT PEAK MAGNETOGRAM

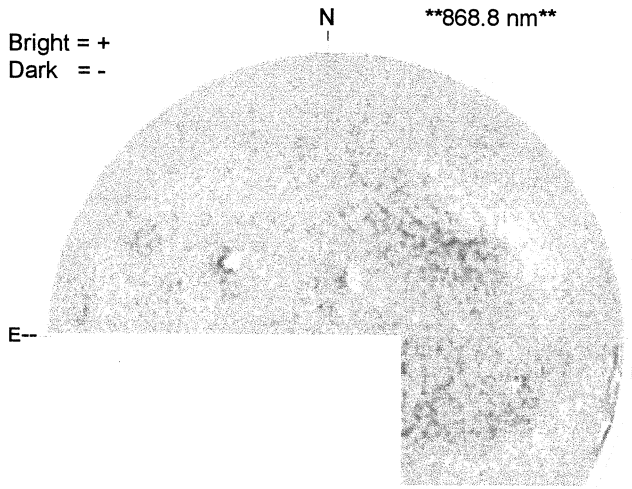

2018 UT

STANFORD MAGNETOGRAM

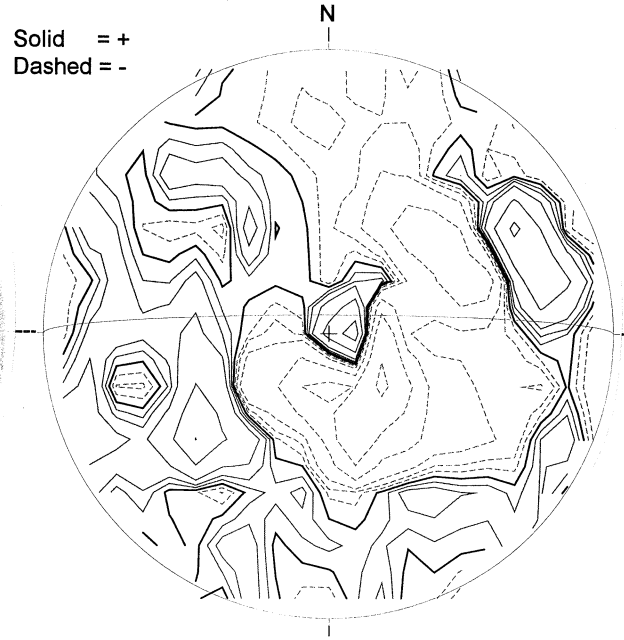

2200 UT

MT. WILSON MAGNETOGRAM

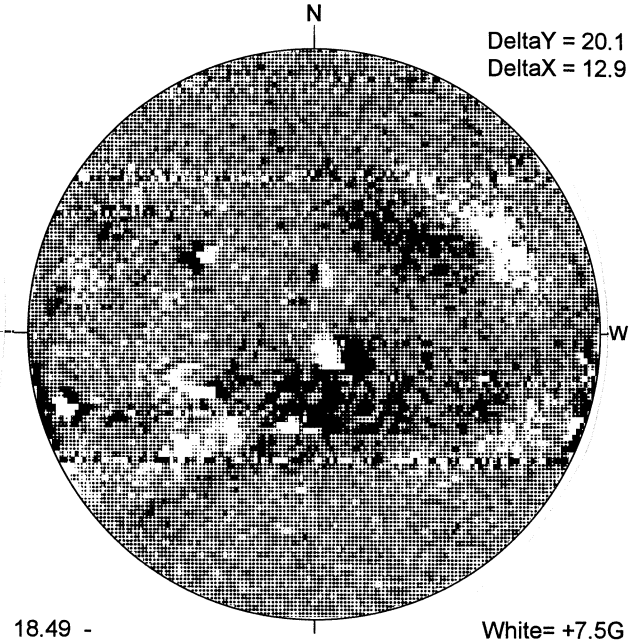

18.49 -
18.92 UT

White= +7.5G
Black = -7.5G

BIG BEAR H-ALPHA

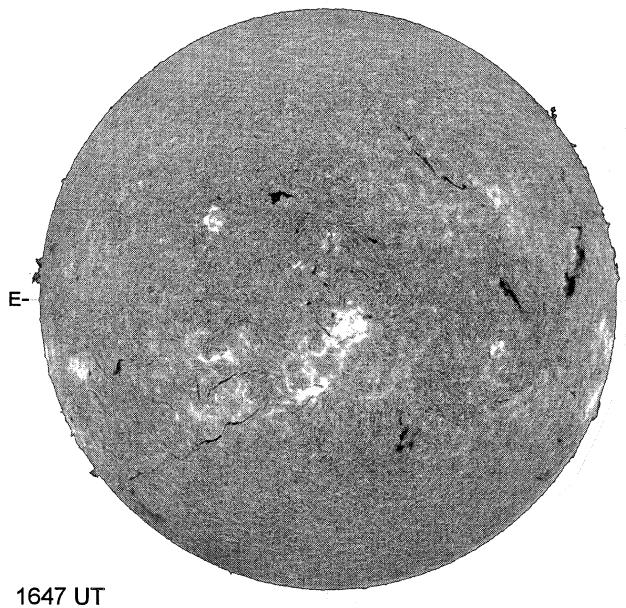

1647 UT

S

RAMEY SUNSPOTS

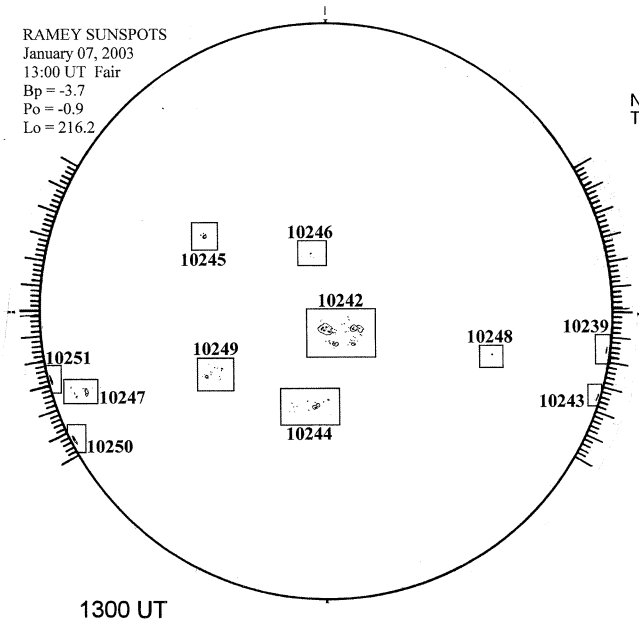

1300 UT

S

SACRAMENTO PEAK CORONA (1.15 Radii)

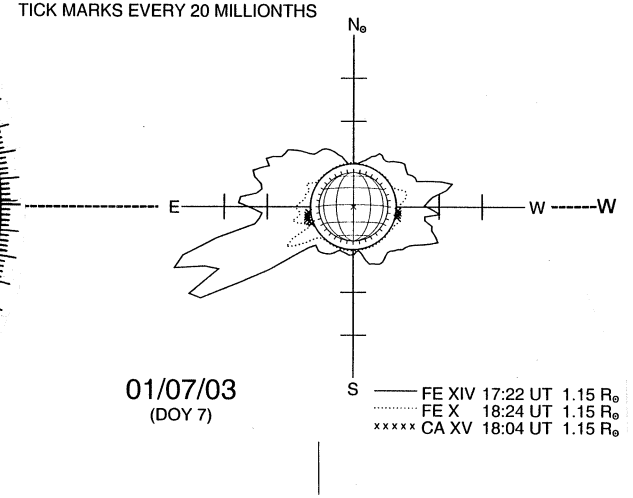

S