JANUARY 1, 2003 (P= 2.25, Bo = -2.98, Lo = 302.15)

KITT PEAK MAGNETOGRAM

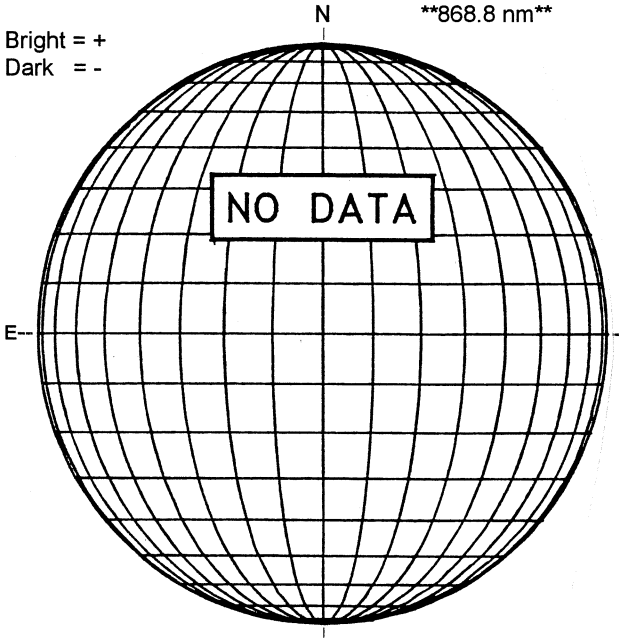

STANFORD MAGNETOGRAM

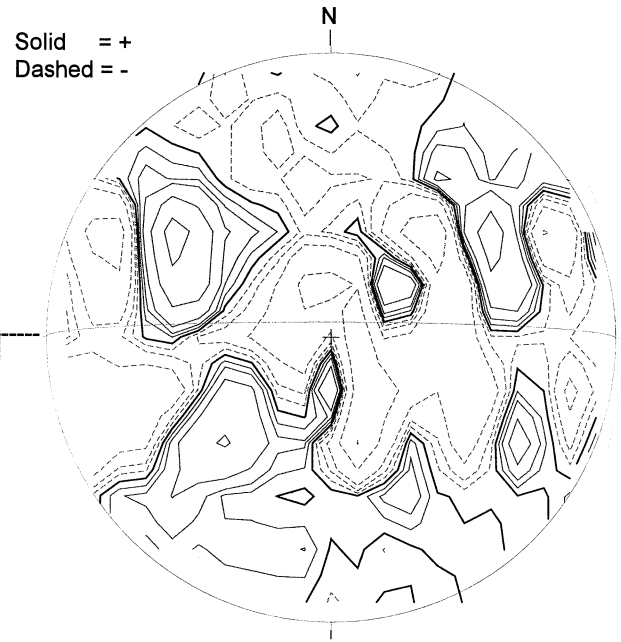

2057 UT

MT. WILSON MAGNETOGRAM

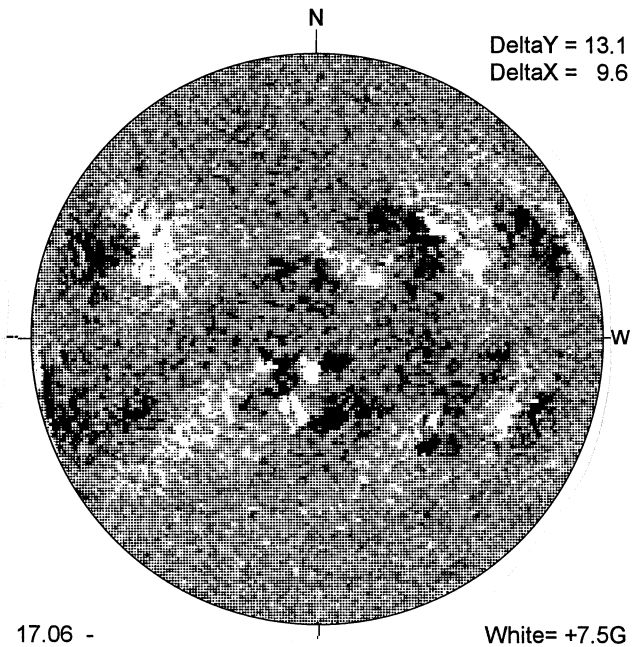

17.06 -
18.04 UT

White= +7.5G
Black = -7.5G

BIG BEAR H-ALPHA

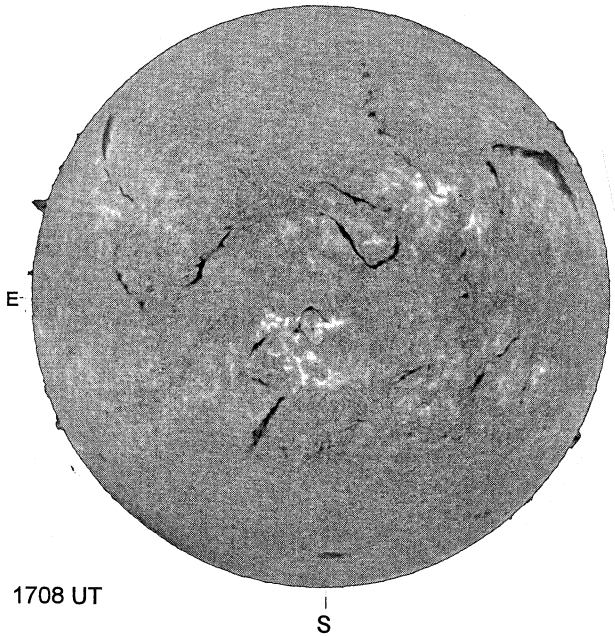

1708 UT

RAMEY SUNSPOT

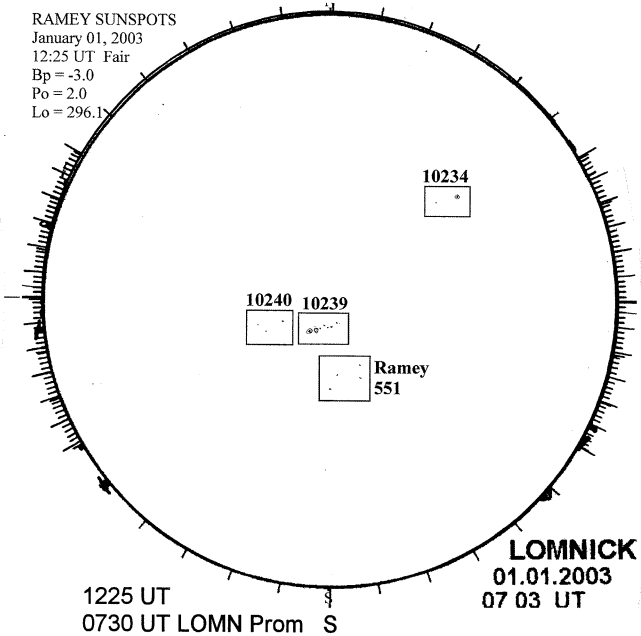

1225 UT
0730 UT LOMN Prom

LOMNICK
01.01.2003
07 03 UT

LOMNICKY PEAK CORONA (1.04 Radii)----

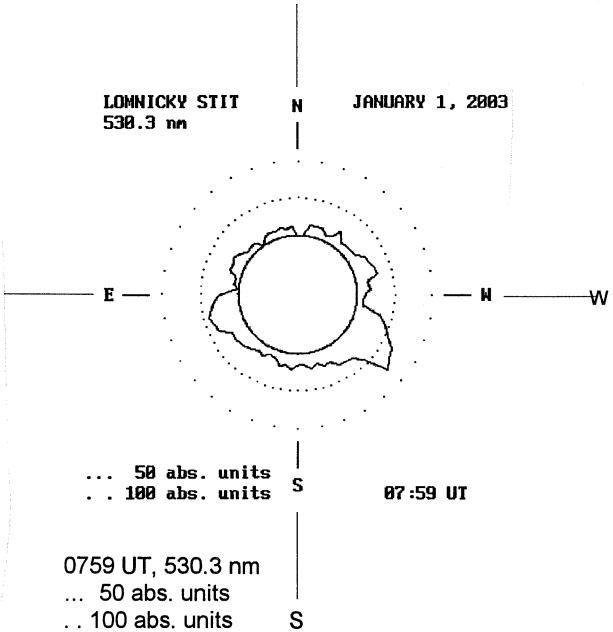

0759 UT, 530.3 nm
... 50 abs. units
. . 100 abs. units