# DECEMBER 31, 2002 ( P= 2.73, Bo = -2.86, Lo = 315.32)

## KITT PEAK MAGNETOGRAM

**868.8 nm**

Bright = +
Dark = -

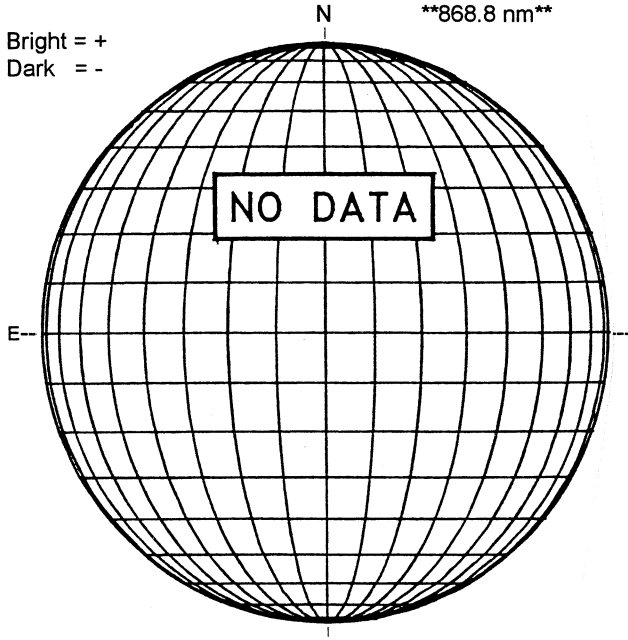


## STANFORD MAGNETOGRAM

Solid = +
Dashed = -

2052 UT

## MT. WILSON MAGNETOGRAM

DeltaY =
DeltaX =

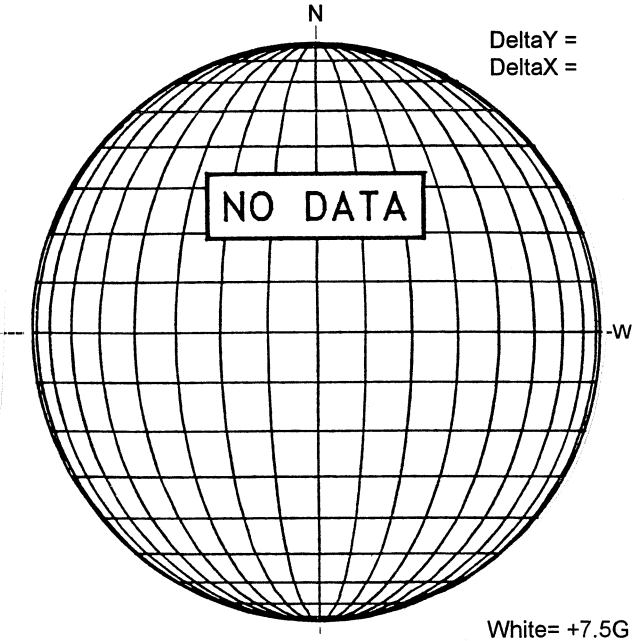


White= +7.5G
Black = -7.5G

## BIG BEAR H-ALPHA

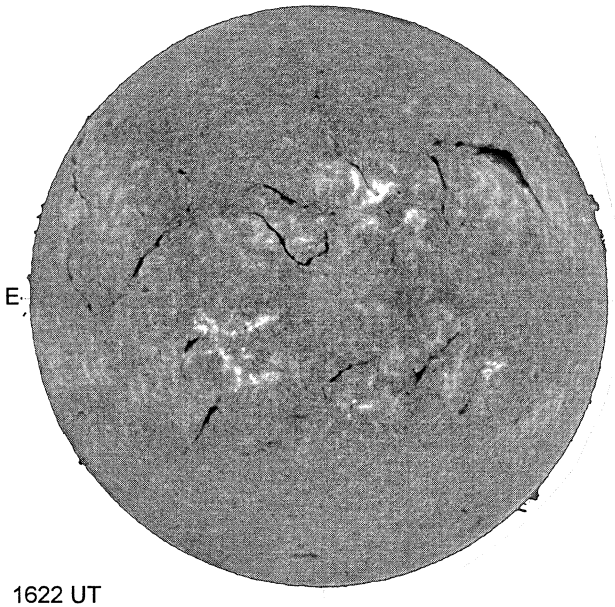


1622 UT

S

## RAMEY SUNSPOT

RAMEY SUNSPOTS
December 31, 2002
12:25 UT Good
Bp = -2.9
Po = 2.5
Lo = 309.4

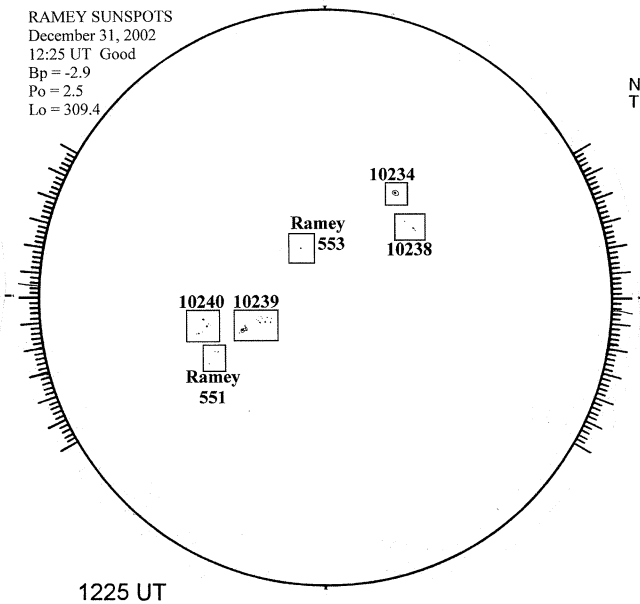


1225 UT

S

## SACRAMENTO PEAK CORONA (1.15 Radii)

NSO / SACRAMENTO PEAK CORONAL DATA
TICK MARKS EVERY 20 MILLIONTHS

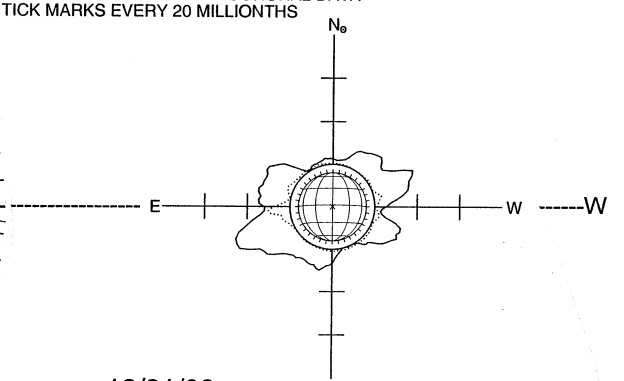


12/31/02
(DOY 365)

FE XIV 16:19 UT 1.15 R⊙
FE X 17:33 UT 1.15 R⊙
CA XV 16:56 UT 1.15 R⊙
NO CA XV ACTIVITY TODAY

S