DECEMBER 27, 2002 (P= 4.67, Bo = -2.38, Lo = 8.00)

KITT PEAK MAGNETOGRAM

Bright = +
Dark = -

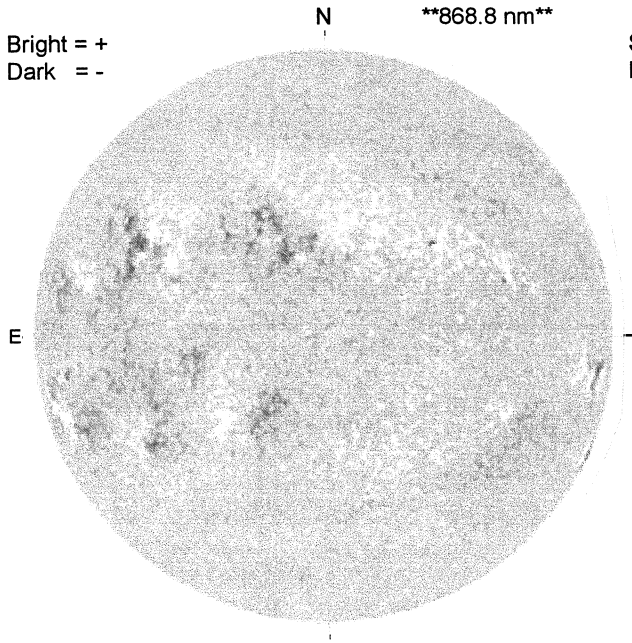

1609 UT

STANFORD MAGNETOGRAM

Solid = +
Dashed = -

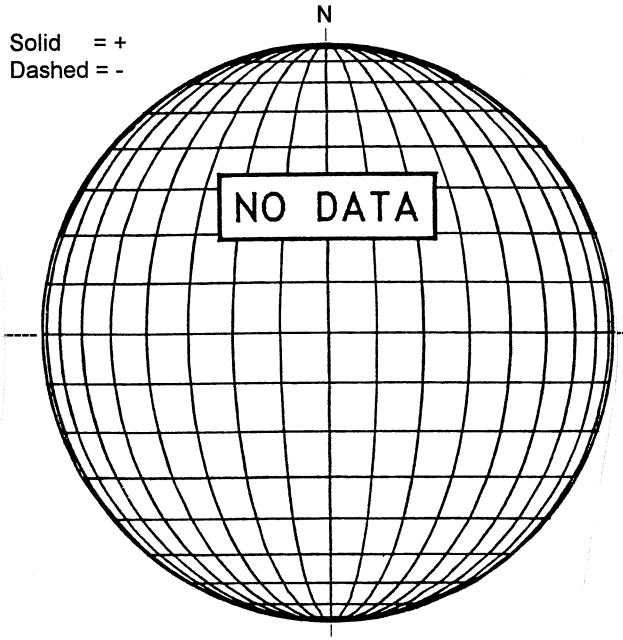

MT. WILSON MAGNETOGRAM

DeltaY = 13.1
DeltaX = 9.6

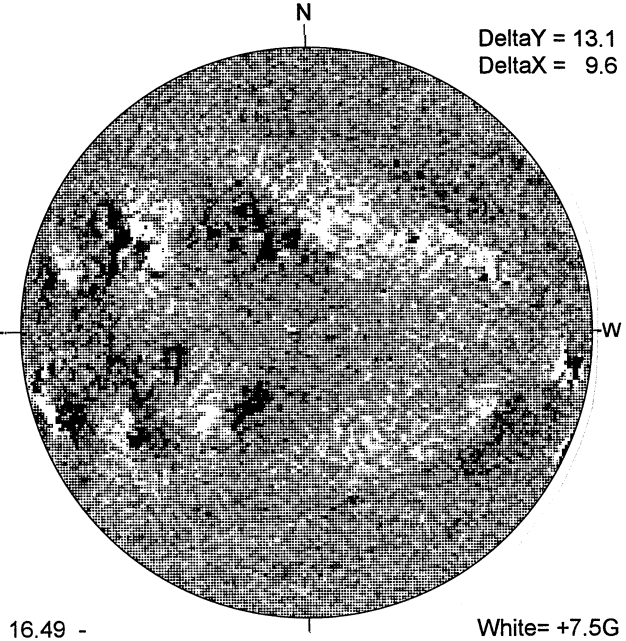

16.49 -
17.46 UT

White= +7.5G
Black = -7.5G

BIG BEAR H-ALPHA

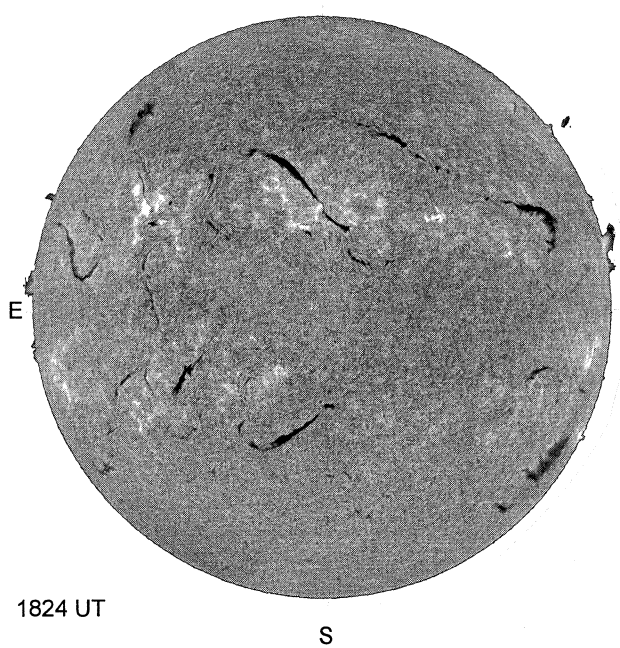

1824 UT

RAMEY SUNSPOT

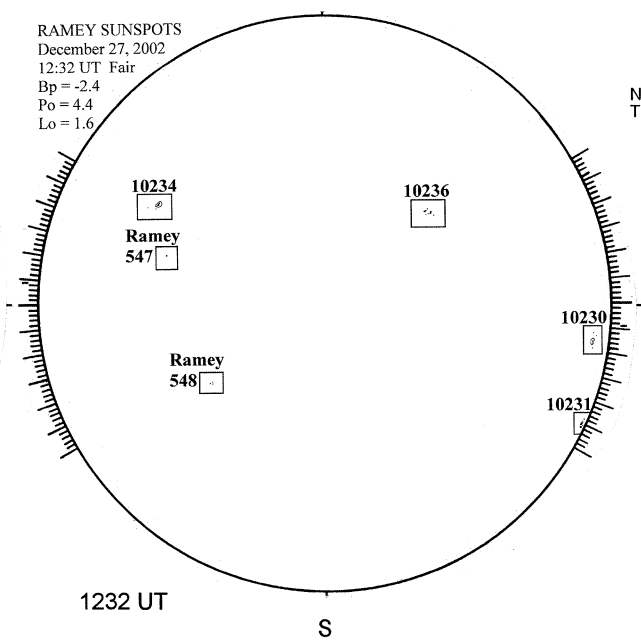

1232 UT

SACRAMENTO PEAK CORONA (1.15 Radii)

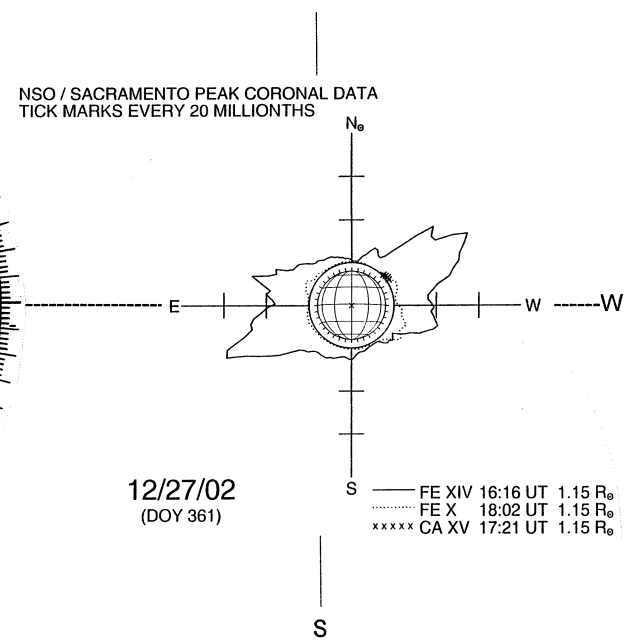

12/27/02
(DOY 361)