DECEMBER 20, 2002 (P= 7.99, Bo = -1.52, Lo = 100.21)

KITT PEAK MAGNETOGRAM

Bright = +
Dark = -

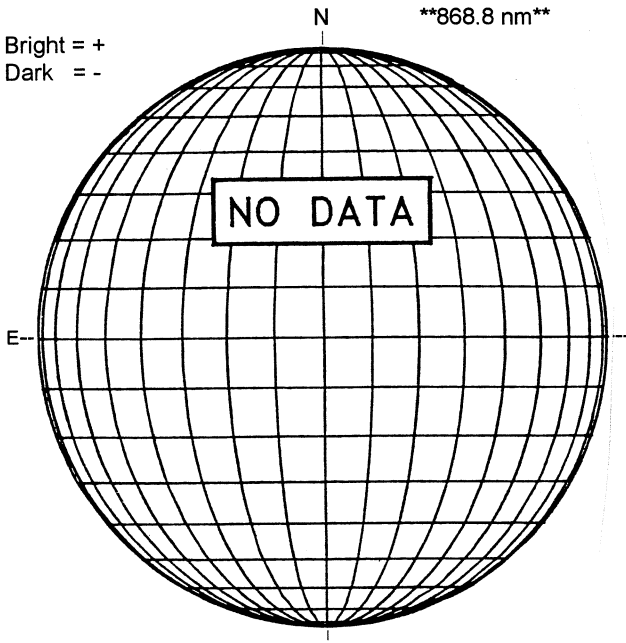

STANFORD MAGNETOGRAM

Solid = +
Dashed = -

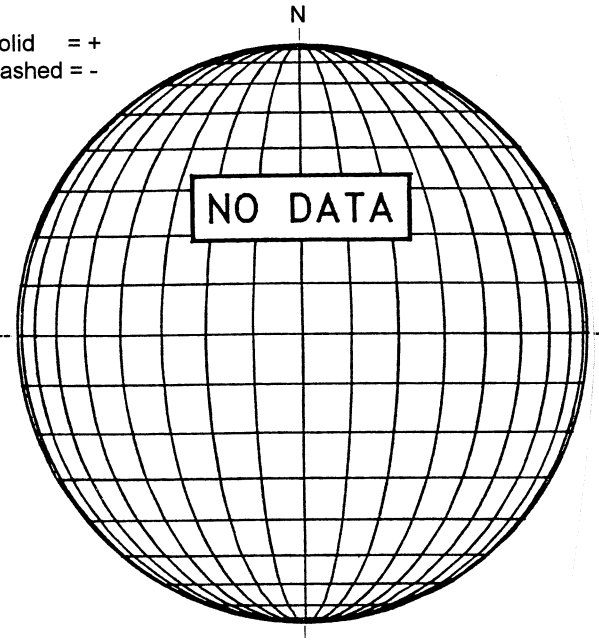

MT. WILSON MAGNETOGRAM

DeltaY =
DeltaX =

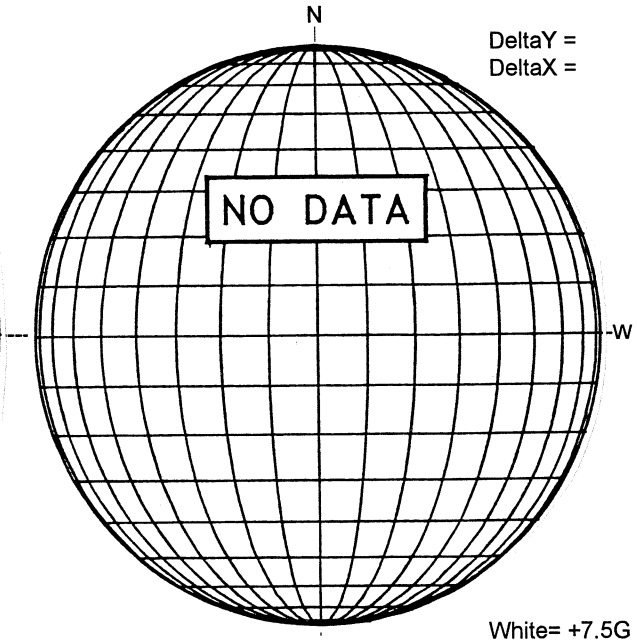

White= +7.5G
Black = -7.5G

KANZELHOHE H-ALPHA

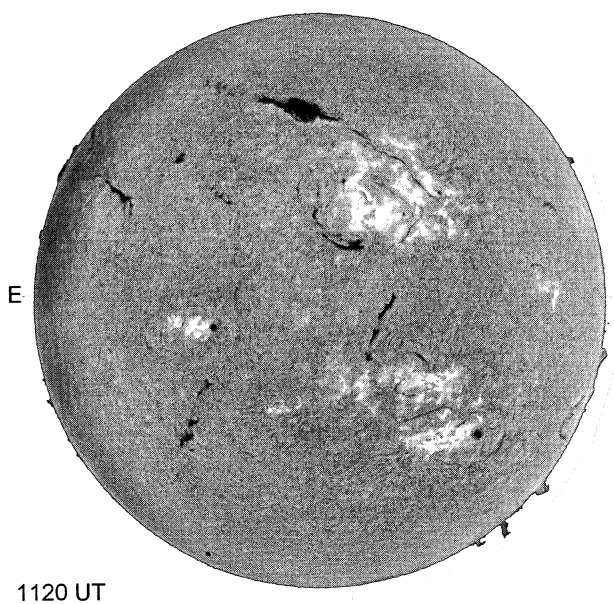

1120 UT

S

RAMEY SUNSPOT

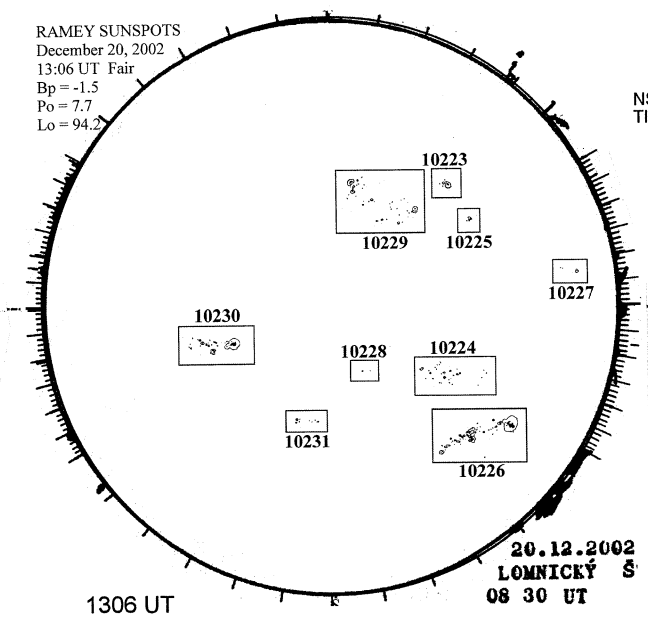

1306 UT
0830 UT LOMN Prom S

SACRAMENTO PEAK CORONA (1.15 Radii)

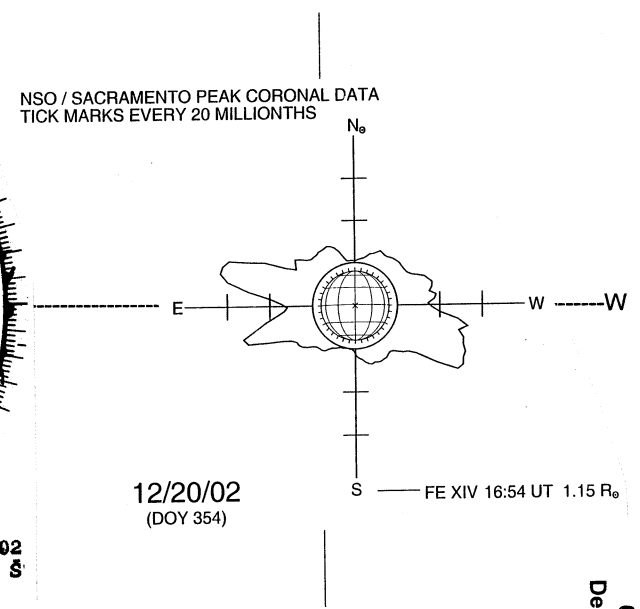

12/20/02
(DOY 354)

S