DECEMBER 13, 2002 (P= 11.19, Bo = -0.63, Lo = 192.44)

KITT PEAK MAGNETOGRAM

Bright = +
Dark = -

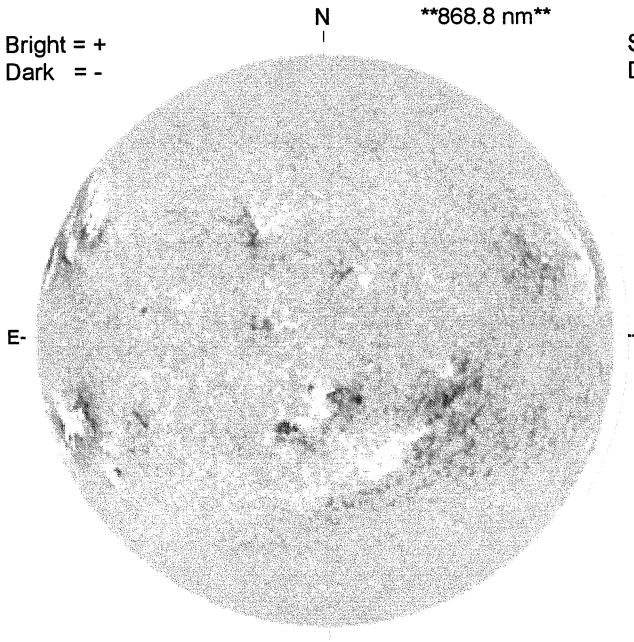

1557 UT

STANFORD MAGNETOGRAM

Solid = +
Dashed = -

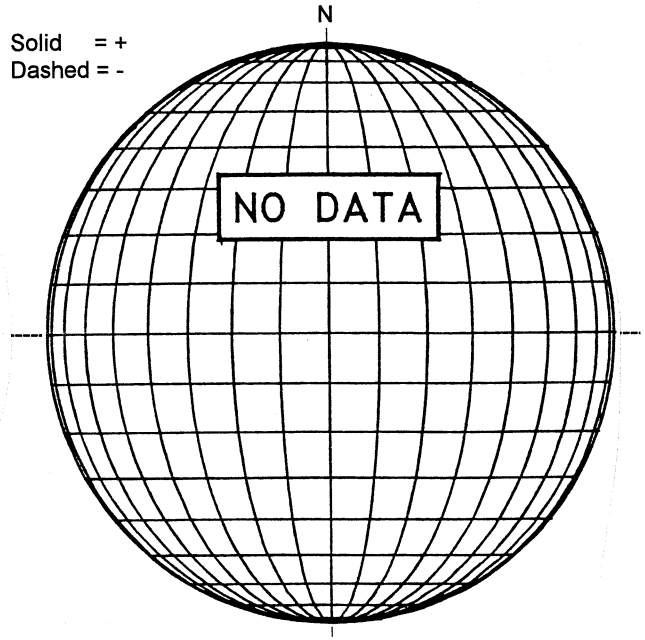

MT. WILSON MAGNETOGRAM

DeltaY =
DeltaX =

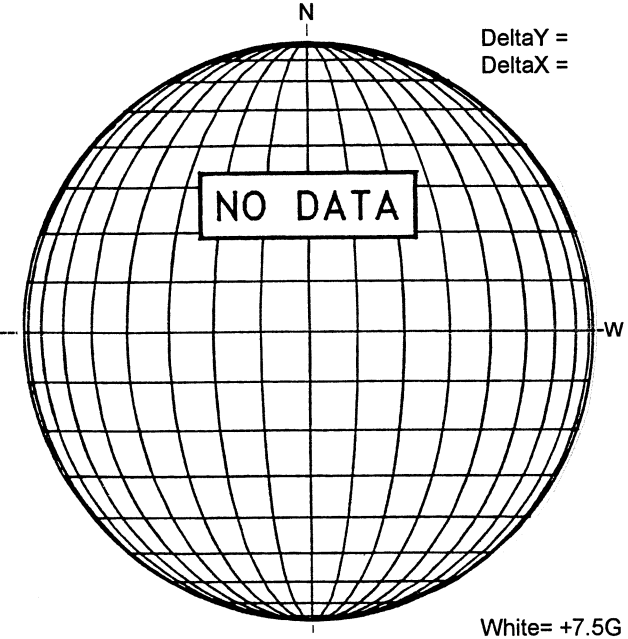

White= +7.5G
Black = -7.5G

KANZELHOHE H-ALPHA

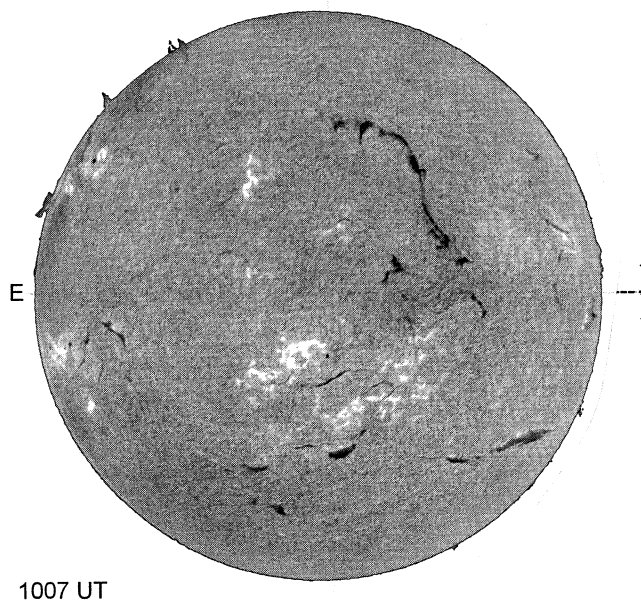

1007 UT

S

RAMEY SUNSPOT

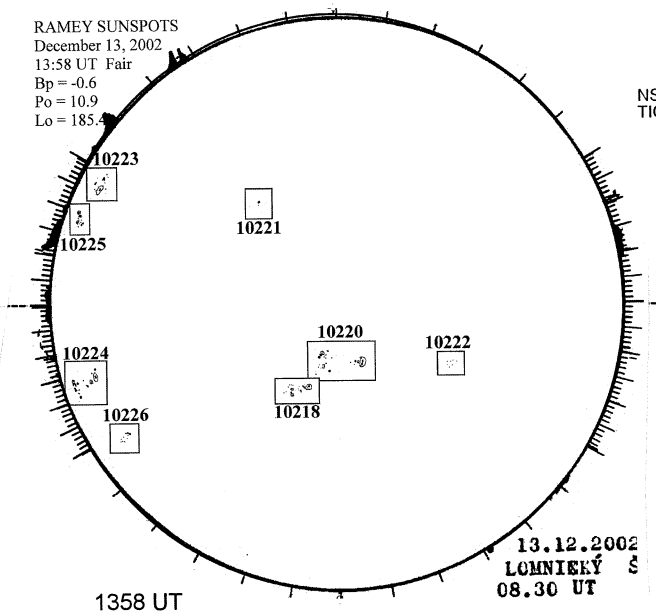

1358 UT
0830 UT LOMN Prom S

SACRAMENTO PEAK CORONA (1.15 Radii)----

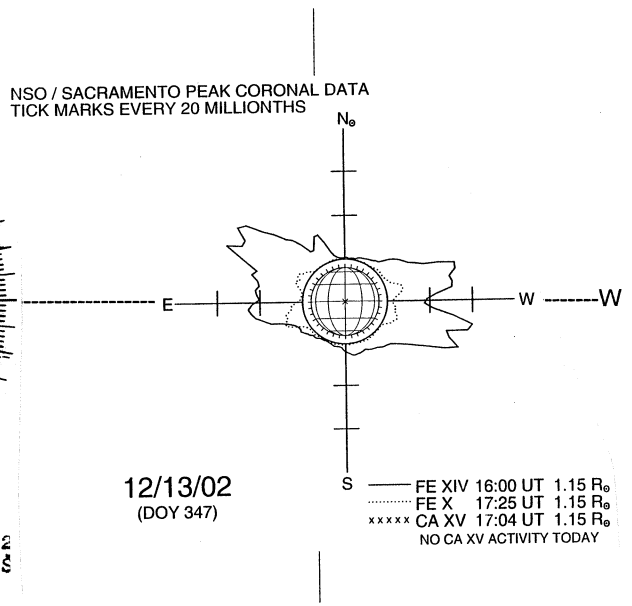

12/13/02
(DOY 347)

S