DECEMBER 11, 2002 (P= 12.07, Bo = -0.37, Lo = 218.79)

KITT PEAK MAGNETOGRAM

868.8 nm

Bright = +
Dark = -

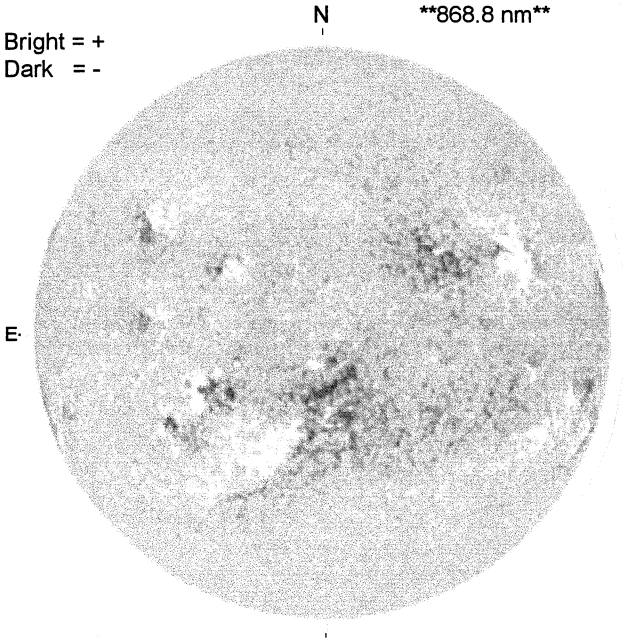

1715 UT

STANFORD MAGNETOGRAM

Solid = +
Dashed = -

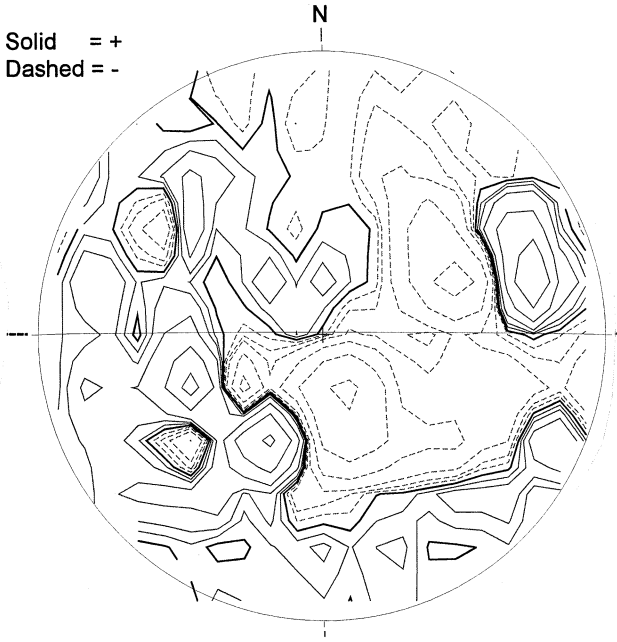

2107 UT

MT. WILSON MAGNETOGRAM

DeltaY = 13.1
DeltaX = 9.6

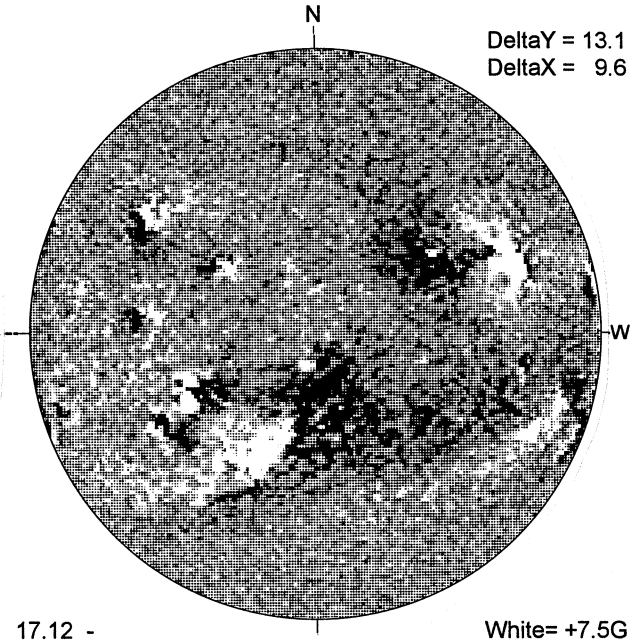

17.12 -
18.10 UT

White= +7.5G
Black = -7.5G

BIG BEAR H-ALPHA

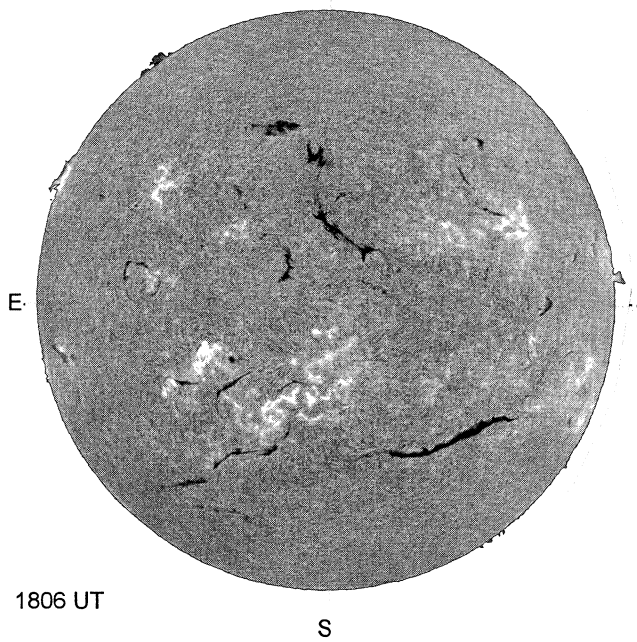

1806 UT

RAMEY SUNSPOTS

RAMEY SUNSPOTS
December 11, 2002
12:32 UT Fair
Bp = -0.4
Po = 11.8
Lo = 212.5

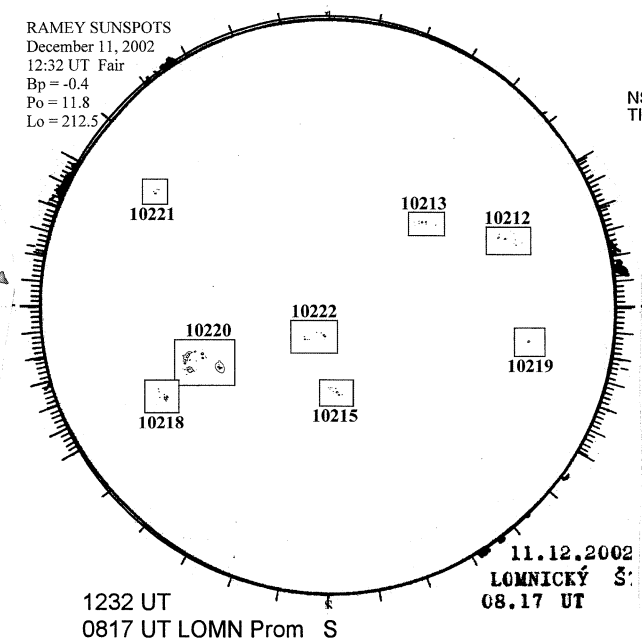

1232 UT
0817 UT LOMN Prom S

SACRAMENTO PEAK CORONA (1.15 Radii)

NSO / SACRAMENTO PEAK CORONAL DATA
TICK MARKS EVERY 20 MILLIONTHS

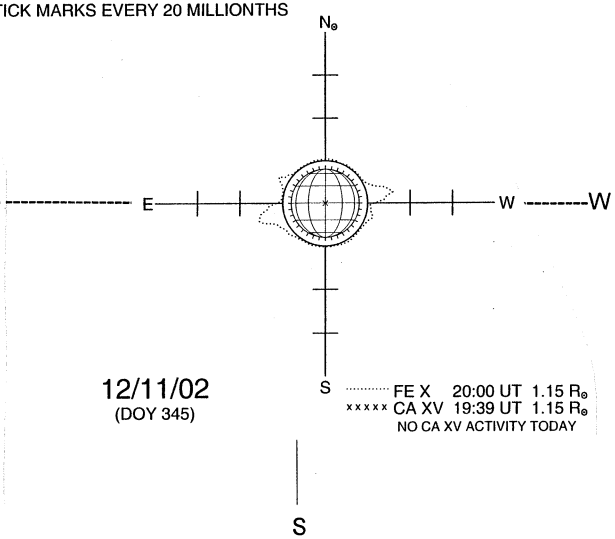

12/11/02
(DOY 345)

FE X 20:00 UT 1.15 $R_\odot$
CA XV 19:39 UT 1.15 $R_\odot$
NO CA XV ACTIVITY TODAY