DECEMBER 9, 2002 (P= 12.93, Bo = -0.12, Lo = 245.14)

KITT PEAK MAGNETOGRAM

N

**868.8 nm

Bright = +
Dark = -

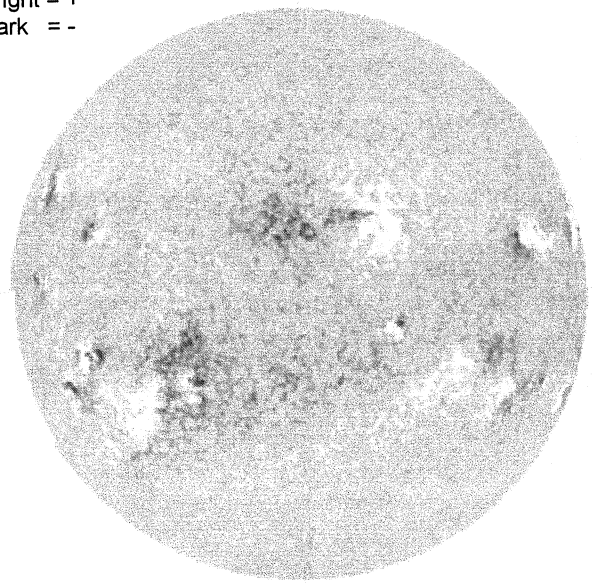

E

1611 UT

STANFORD MAGNETOGRAM

N

Solid = +
Dashed = -

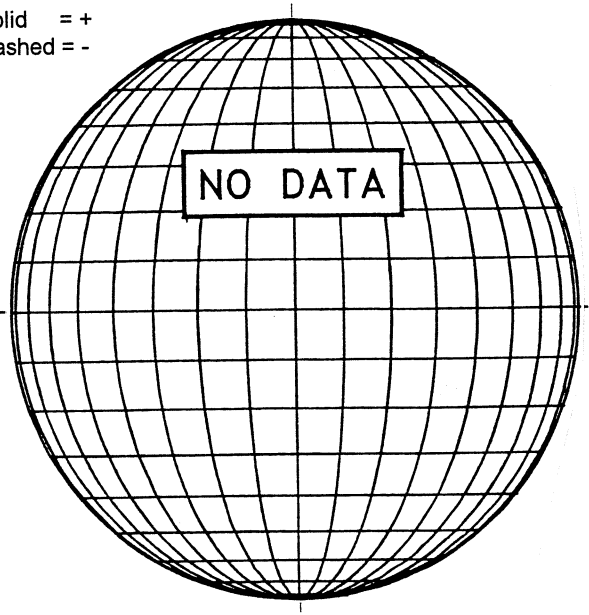

MT. WILSON MAGNETOGRAM

N

DeltaY = 13.1
DeltaX = 9.6

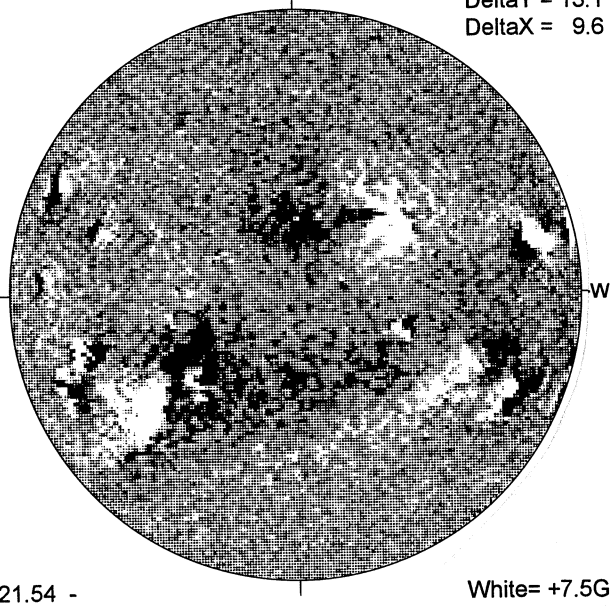

W

21.54 -
22.52 UT

White= +7.5G
Black = -7.5G

CATANIA H-ALPHA

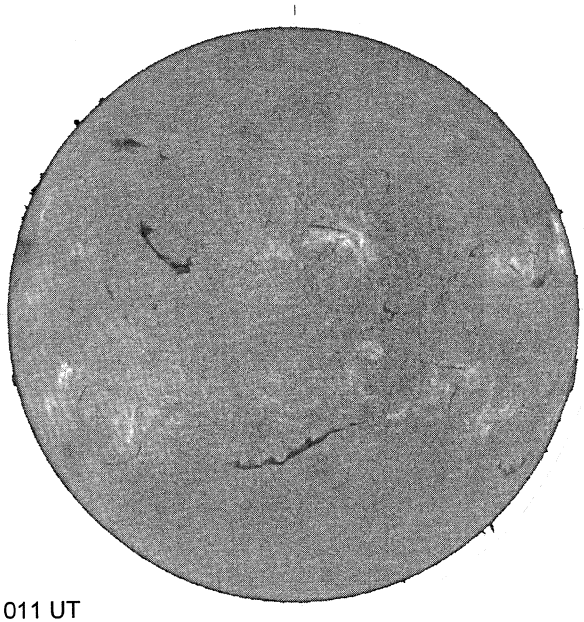

E

1011 UT

S

RAMEY SUNSPOT

RAMEY SUNSPOTS
December 09, 2002
12:40 UT Poor
Bp = -0.1
Po = 12.7
Lo = 238.8

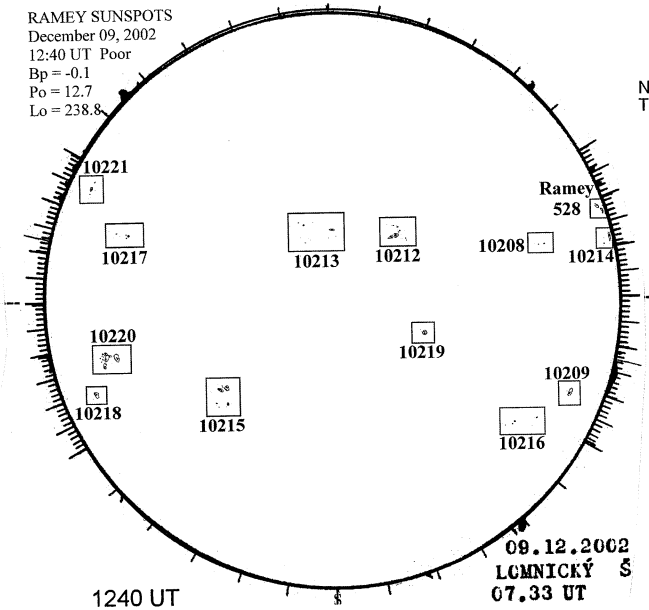

1240 UT
0733 UT LOMN Prom S

SACRAMENTO PEAK CORONA (1.15 Radii)

NSO / SACRAMENTO PEAK CORONAL DATA
TICK MARKS EVERY 20 MILLIONTHS

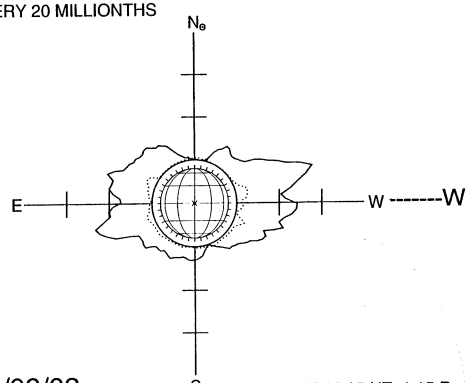

12/09/02
(DOY 343)

FE XIV 16:35 UT 1.15 R☉
FE X 17:57 UT 1.15 R☉
xxxxx CA XV 17:17 UT 1.15 R☉
NO CA XV ACTIVITY TODAY

S