DECEMBER 4, 2002 (P= 15.00, Bo = 0.52, Lo = 311.03)

KITT PEAK MAGNETOGRAM

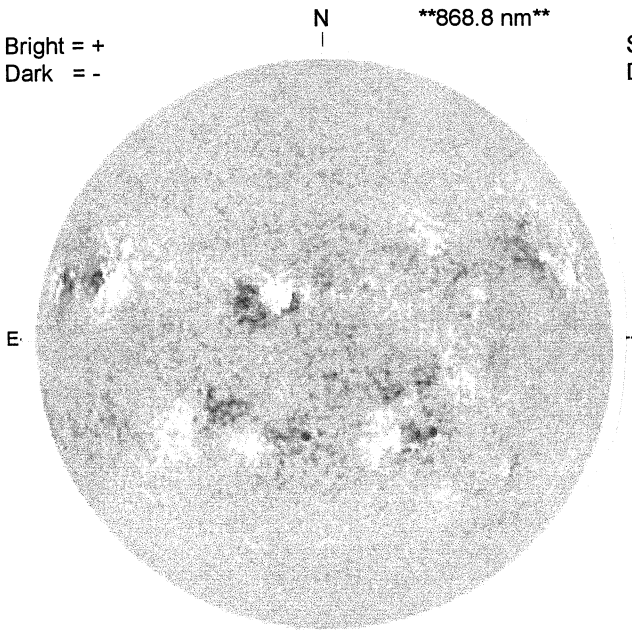

1611 UT

STANFORD MAGNETOGRAM

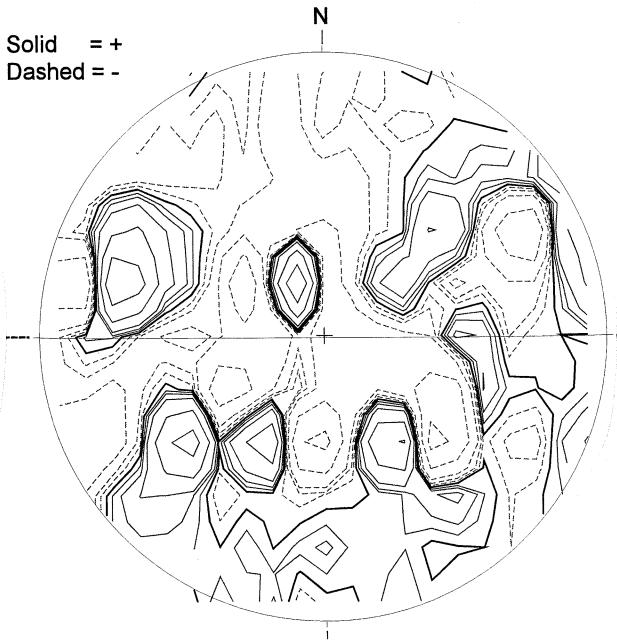

2105 UT

MT. WILSON MAGNETOGRAM

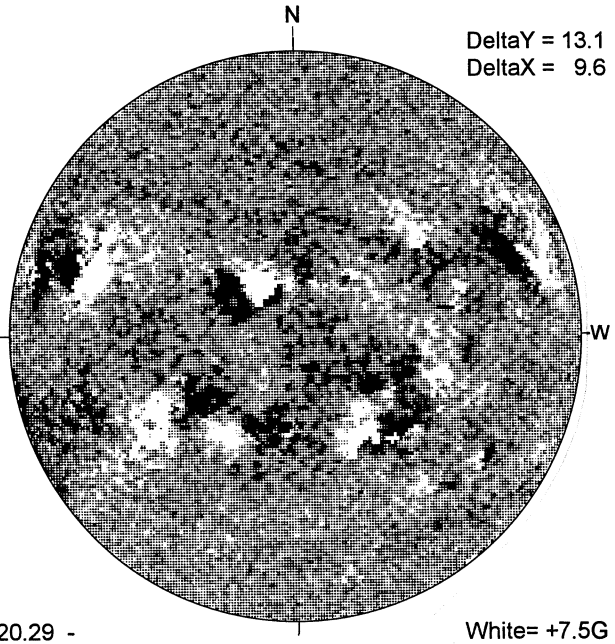

20.29 -
21.26 UT

White= +7.5G
Black = -7.5G

BIG BEAR H-ALPHA

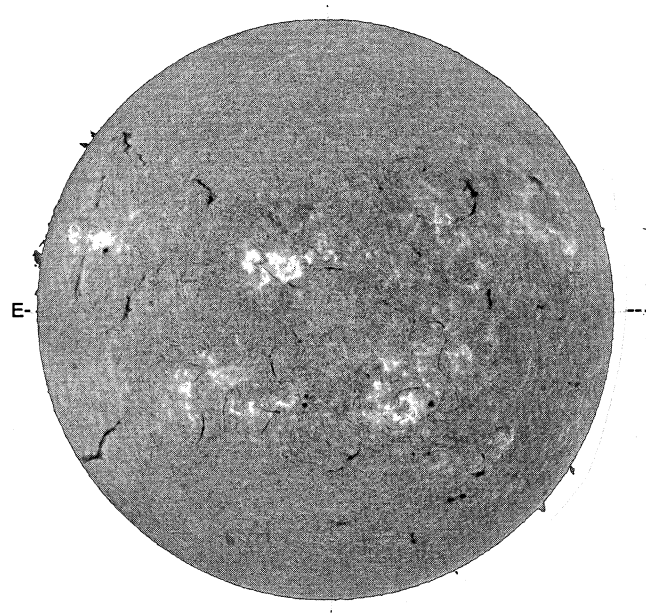

1713 UT

S

LEARMONTH SUNSPOT

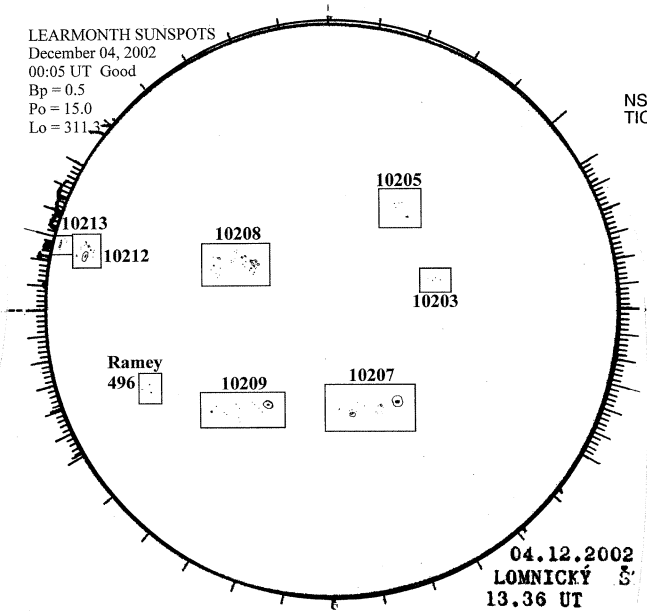

0005 UT
1336 UT LOMN Prom S

SACRAMENTO PEAK CORONA (1.15 Radii)----

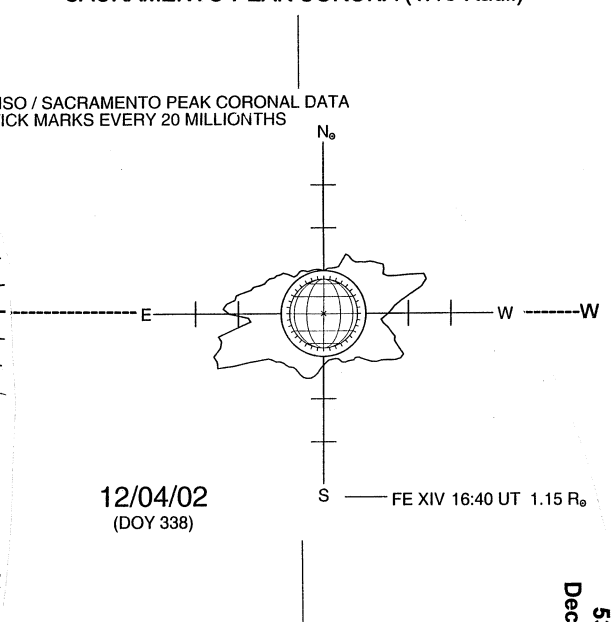

12/04/02
(DOY 338)

S