NOVEMBER 27, 2002 (P= 17.66, Bo = 1.41, Lo = 43.28)

KITT PEAK MAGNETOGRAM

868.8 nm

Bright = +
Dark = -

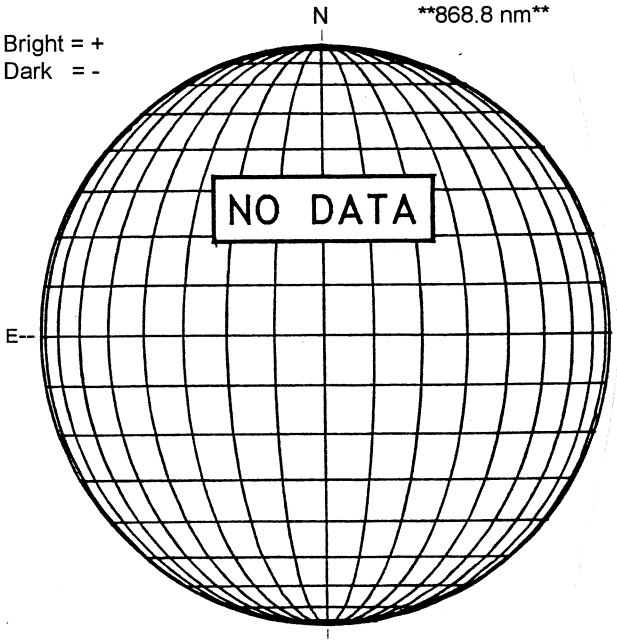

STANFORD MAGNETOGRAM

Solid = +
Dashed = -

2116 UT

MT. WILSON MAGNETOGRAM

DeltaY = 20.2
DeltaX = 13.0

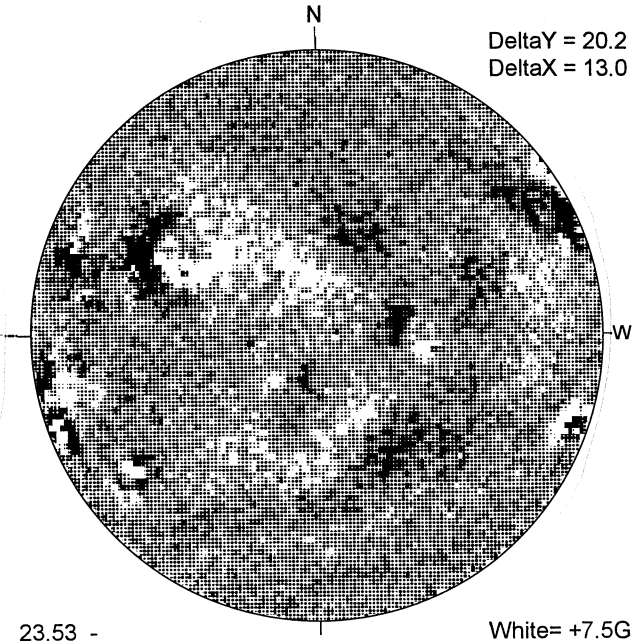

23.53 -
23.96 UT

White= +7.5G
Black = -7.5G

KANZELHOHE H-ALPHA

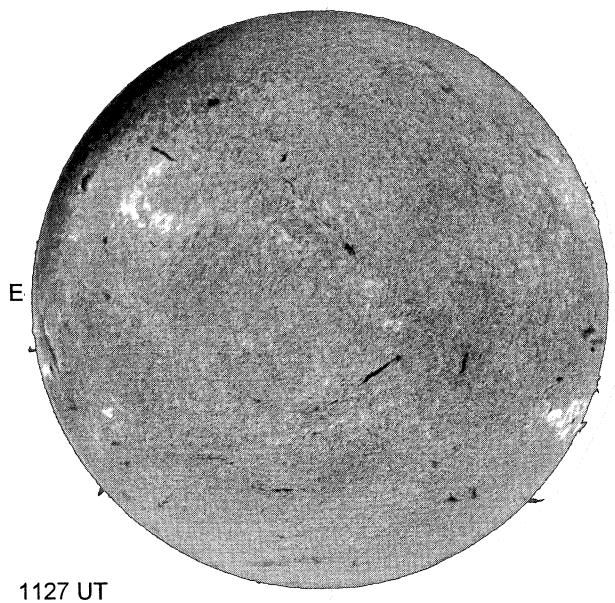

1127 UT

S

RAMEY SUNSPOT

RAMEY SUNSPOTS
November 27, 2002
12:30 UT Fair
Bp = 1.3
Po = 17.5
Lo = 37.6

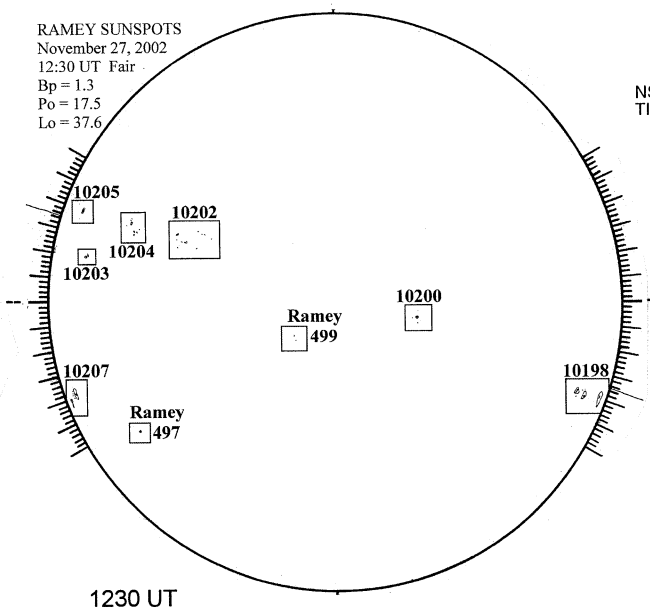

1230 UT

S

SACRAMENTO PEAK CORONA (1.15 Radii)

NSO / SACRAMENTO PEAK CORONAL DATA
TICK MARKS EVERY 20 MILLIONTHS

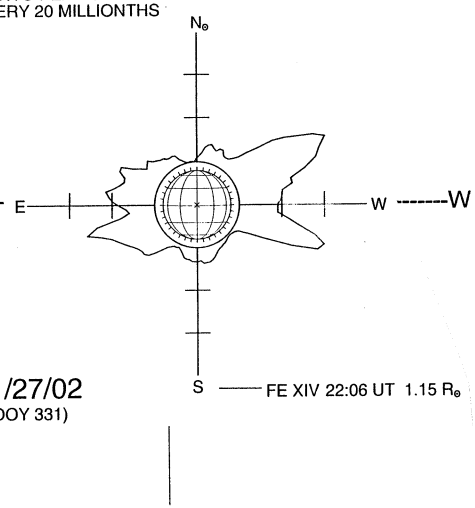

11/27/02
(DOY 331)

FE XIV 22:06 UT 1.15 R⊙

S