NOVEMBER 25, 2002 (P= 18.37, Bo = 1.66, Lo = 69.64)

KITT PEAK MAGNETOGRAM

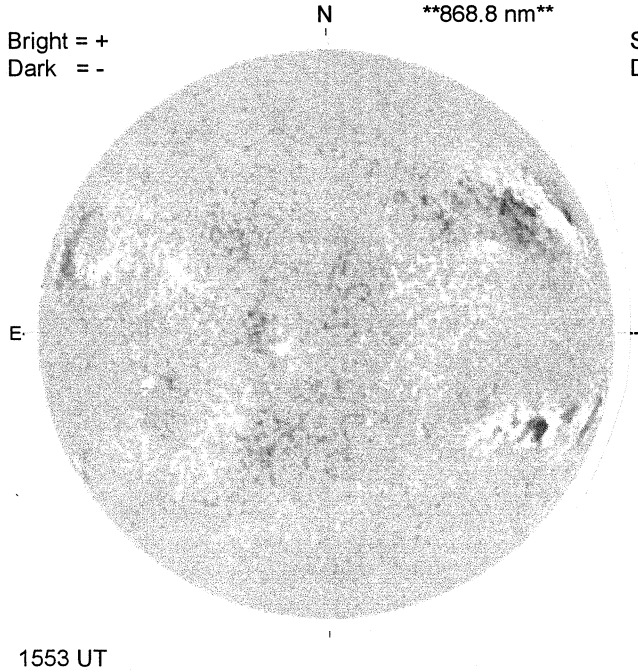

STANFORD MAGNETOGRAM

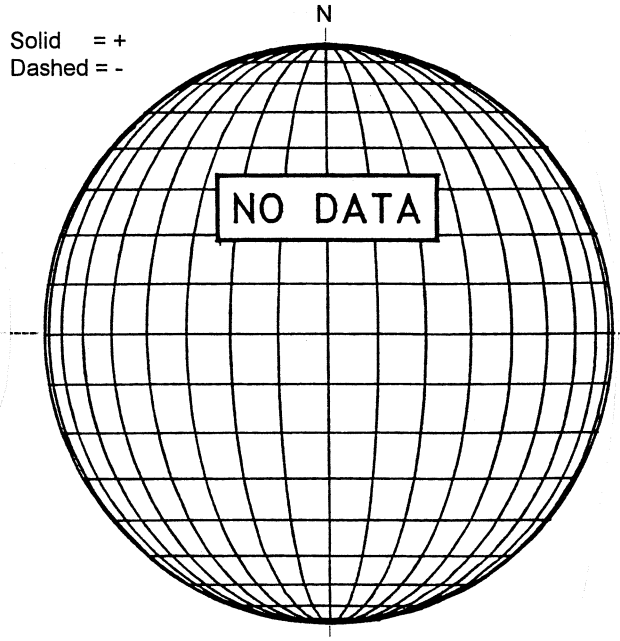

MT. WILSON MAGNETOGRAM

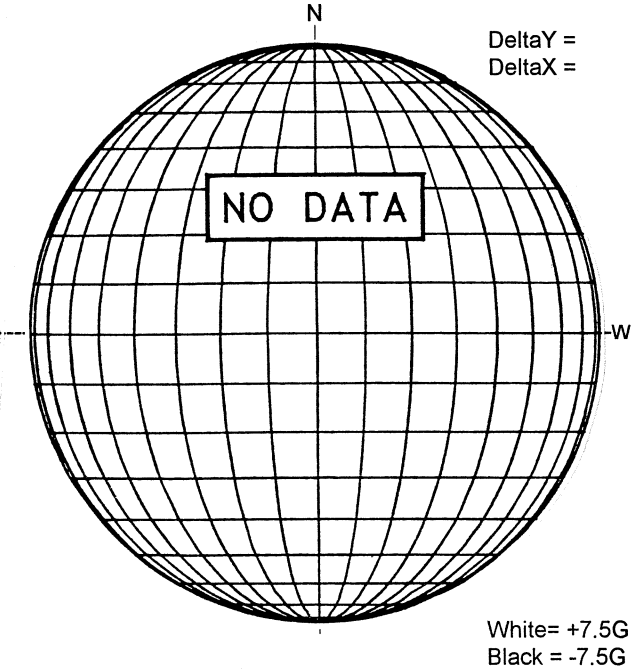

BIG BEAR H-ALPHA

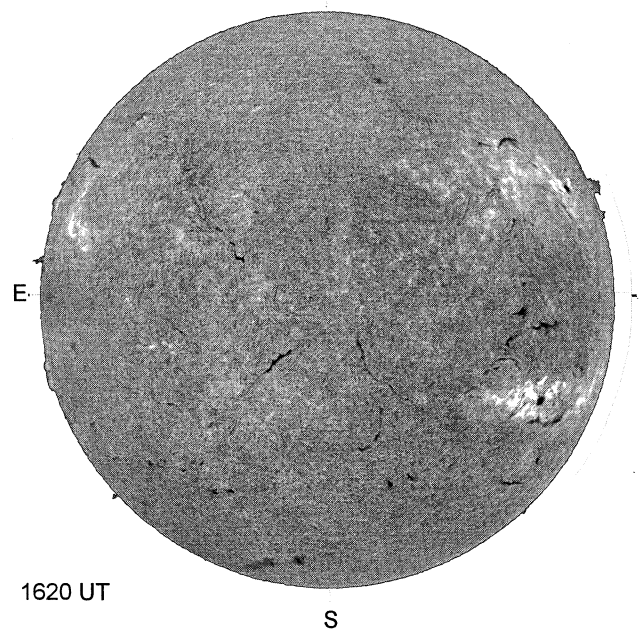

RAMEY SUNSPOT

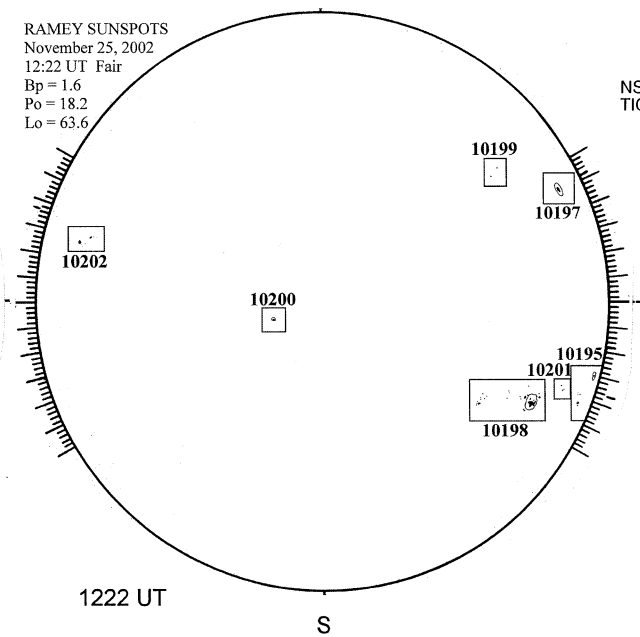
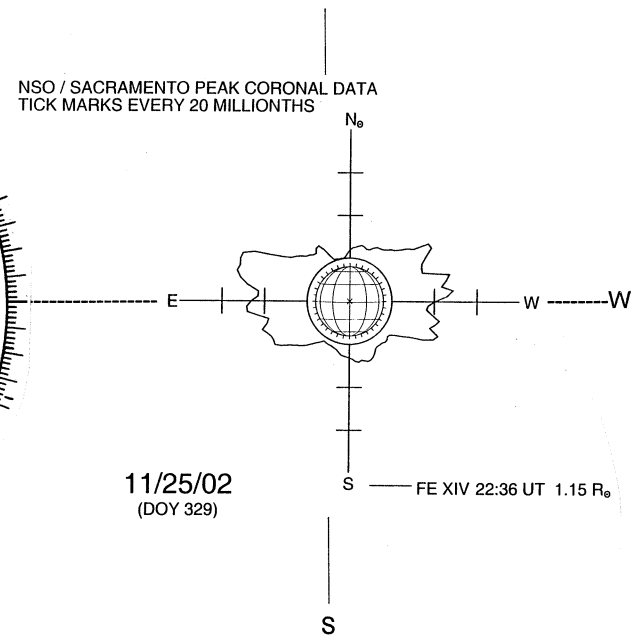
SACRAMENTO PEAK CORONA (1.15 Radii)