NOVEMBER 23, 2002 (P= 19.04, Bo = 1.91, Lo = 96.00)

KITT PEAK MAGNETOGRAM

Bright = +
Dark = -

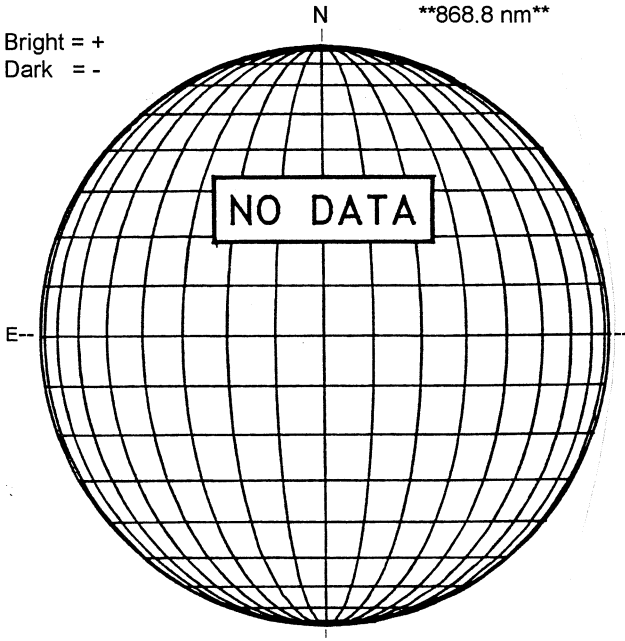

STANFORD MAGNETOGRAM

Solid = +
Dashed = -

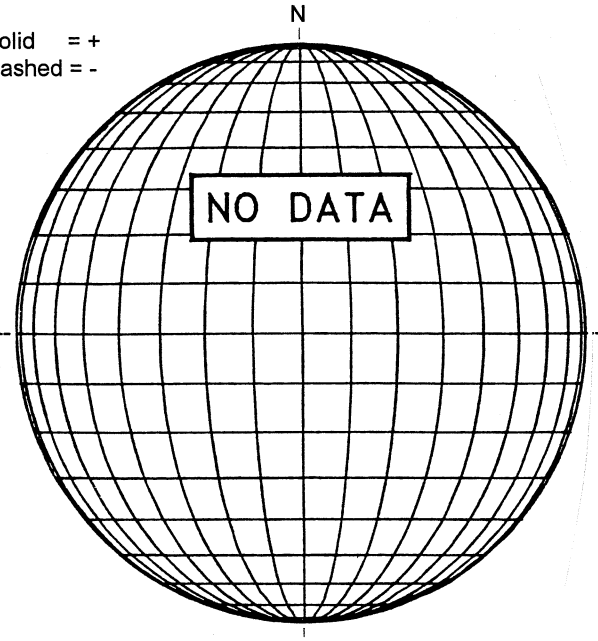

MT. WILSON MAGNETOGRAM

DeltaY = 20.1
DeltaX = 13.0

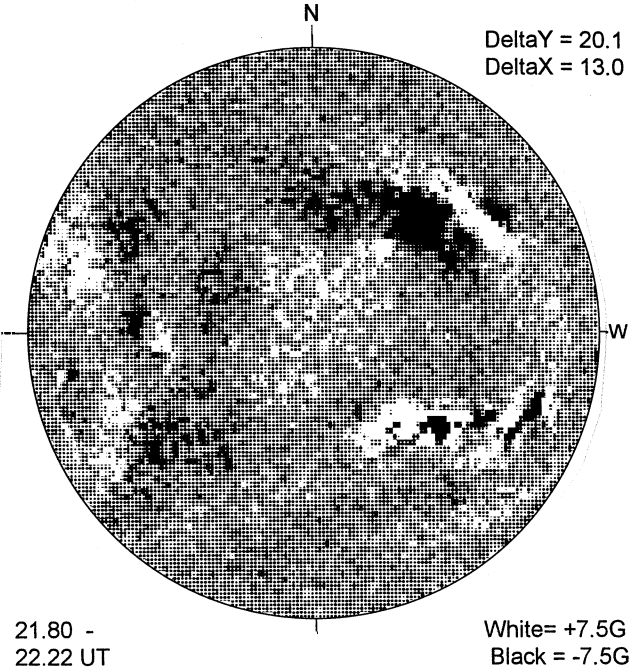

21.80 -
22.22 UT

White= +7.5G
Black = -7.5G

BIG BEAR H-ALPHA

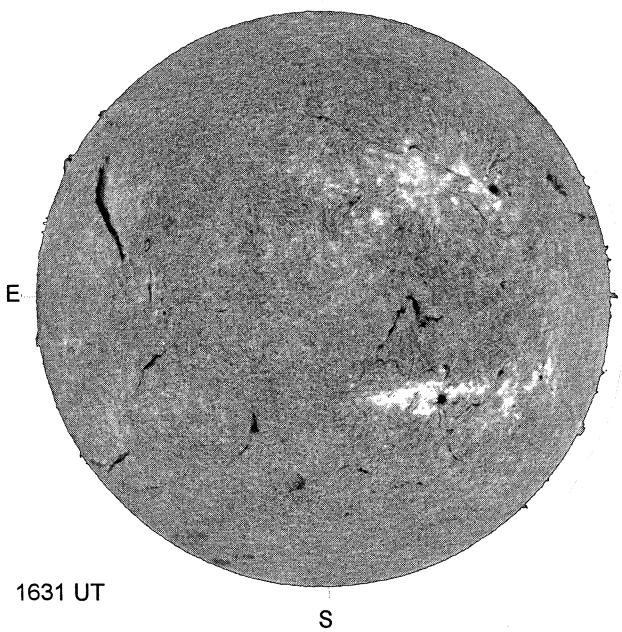

1631 UT

RAMEY SUNSPOT

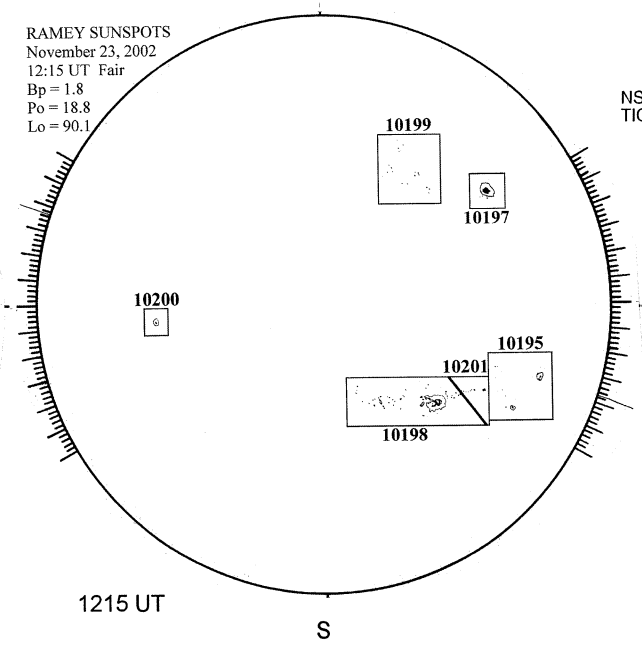

1215 UT

SACRAMENTO PEAK CORONA (1.15 Radii)----

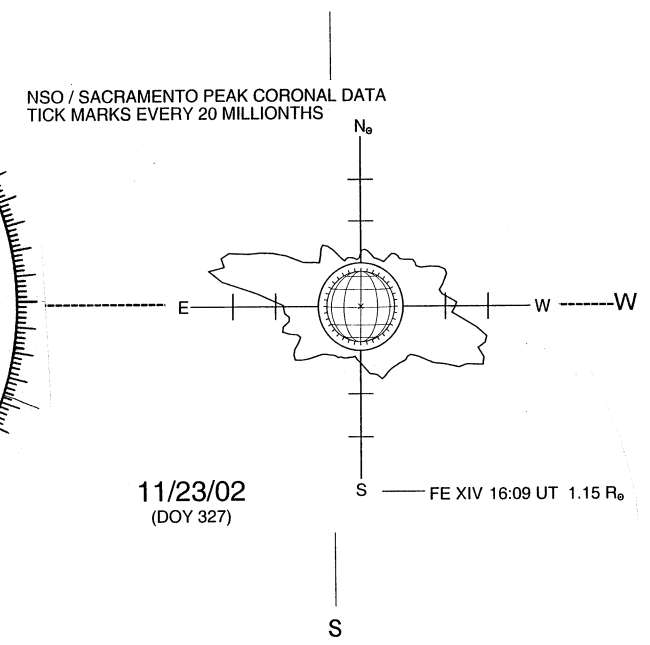

11/23/02
(DOY 327)